D:\Revit Local Files\14-0451-00_SA College Johnson Center_R16_Struc_jarciaga.rvt
8/21/2018 4:11:10 PM

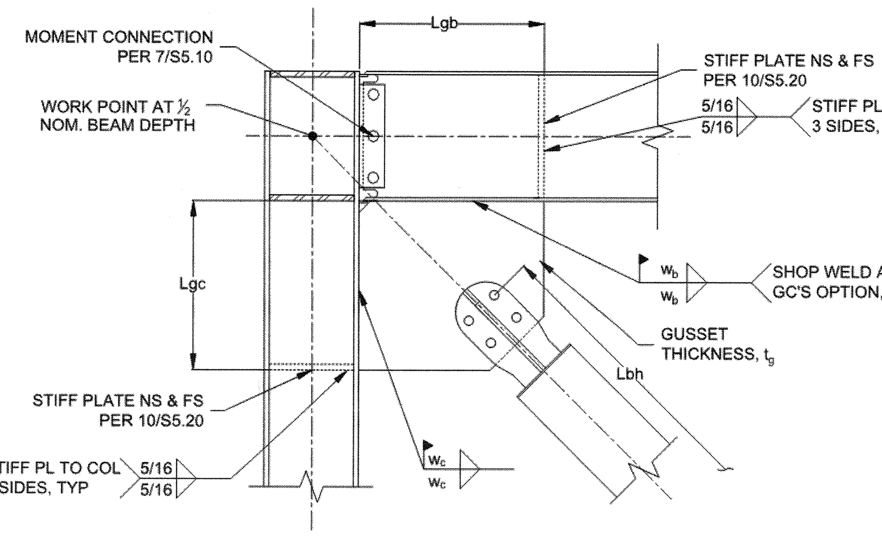

STRONG AXIS COLUMN

(SIM WITH BRACE AT OPPOSITE SIDE OF COLUMN WEB)

BRB AT ROOF (4)

SCALE:NTS

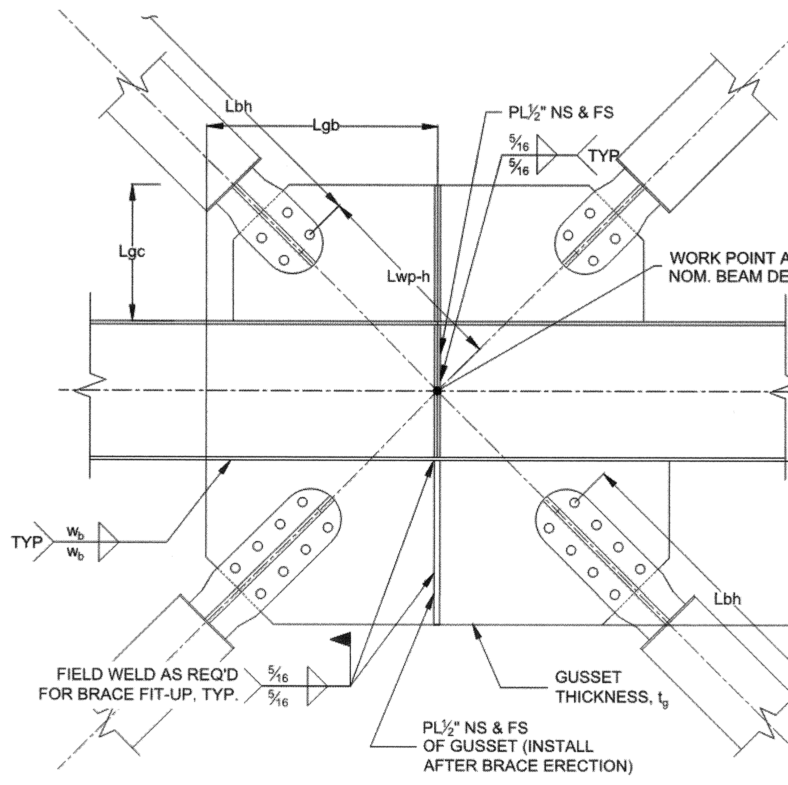

(SIM WITH BRACES ONLY BELOW BEAM)

BRB AT CHEVRON (3)

NOTE: REFERENCE DETAIL 1 FOR ADDITIONAL INFORMATION. FIELD INSTALL GUSSET STIFFENER AS REQUIRED FOR BRB INSTALL

SCALE:NTS

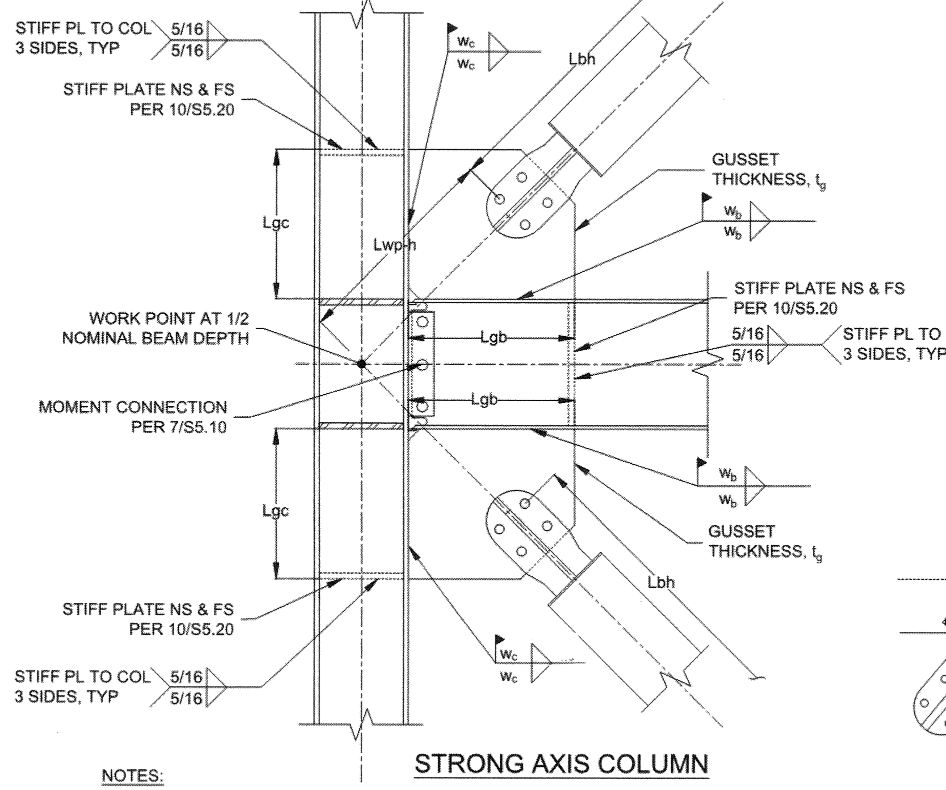

STRONG AXIS COLUMN

NOTES:

SEE 10/S5.20 SCHEDULE FOR THE FOLLOWING ITEMS (UNIQUE TO EACH BRACE):

1. Wb, Lwb: SIZE AND LENGTH OF GUSSET WELD TO BEAM/BASE PLATE.
2. Wc, Lwc: SIZE AND LENGTH OF GUSSET WELD TO COLUMN.
3. Lgb: APPROXIMATE WIDTH OF GUSSET.
4. Lgc: APPROX. HEIGHT OF GUSSET.
5. tg: GUSSET THICKNESS
6. WHERE GUSSET PL IS LONGER THAN REQ'D WELD LENGTH, PROVIDE WELD ALONG ENTIRE LENGTH, TYP.

BRB ABOVE & BELOW BEAM (1)

SCALE:NTS

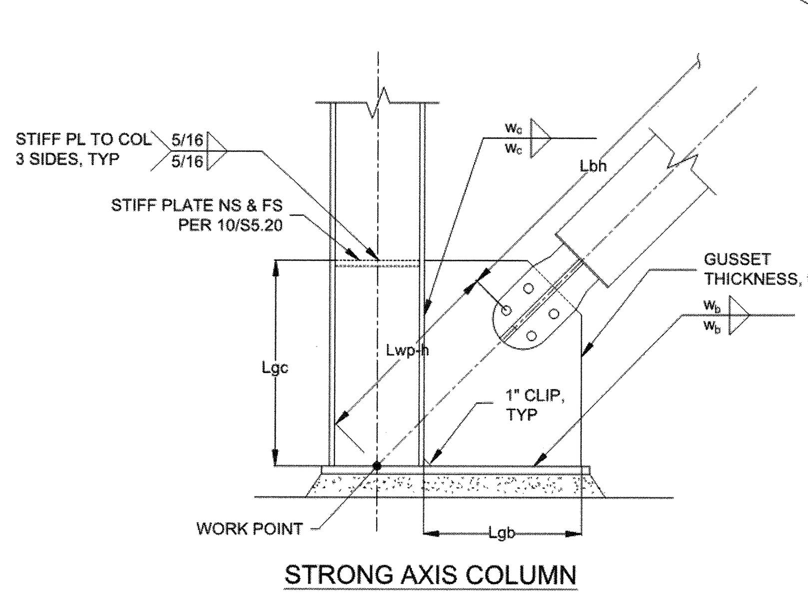

STRONG AXIS COLUMN

(SIM WITH BRACE AT OPPOSITE SIDE OF COLUMN FLANGE)

BRB AT BASEPLATE (2)

SCALE:NTS

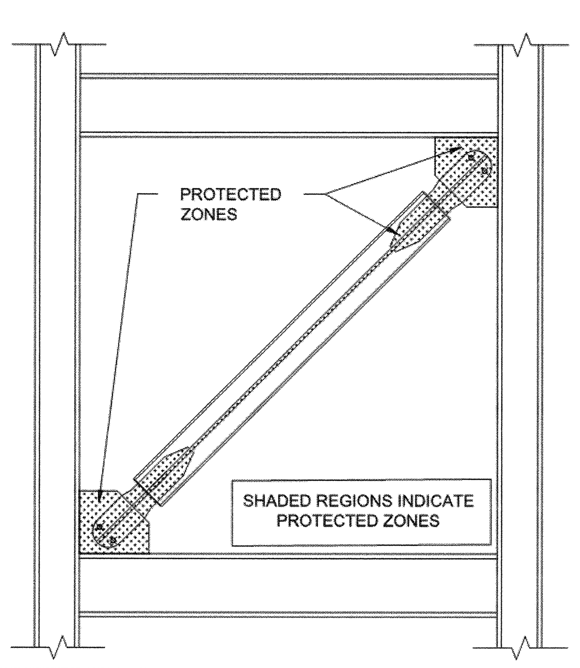

BRB PROTECTED ZONES SHALL INCLUDE THE STEEL CORE AND CONNECTION ELEMENTS AND SHALL SATISFY THE REQUIREMENTS OF SECTION F4.5c OF AISC 341-10.
ADDITIONALLY, ATTACHMENTS WHICH PENETRATE THE CASING (SCREWS, PAF, ETC) OR ANY ATTACHMENT SUPPORTING OVER 50 LBS SHALL BE APPROVED BY THE ENGINEER OF RECORD AND THE BRB MANUFACTURER. ALTERATIONS OR SHOT PINS NOT PERMITTED IN PROTECTED ZONES.

PROTECTED ZONES DETAIL (5)

SCALE:NTS

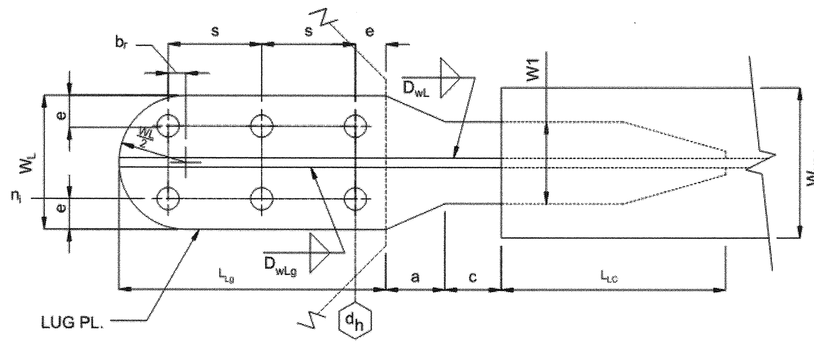

SINGLE BOLT ROW

NOTE:
1. BOLT HOLES IN LUGS ARE STANDARD HOLES.

TYPICAL END CONNECTION DETAIL (8)

SCALE:NTS

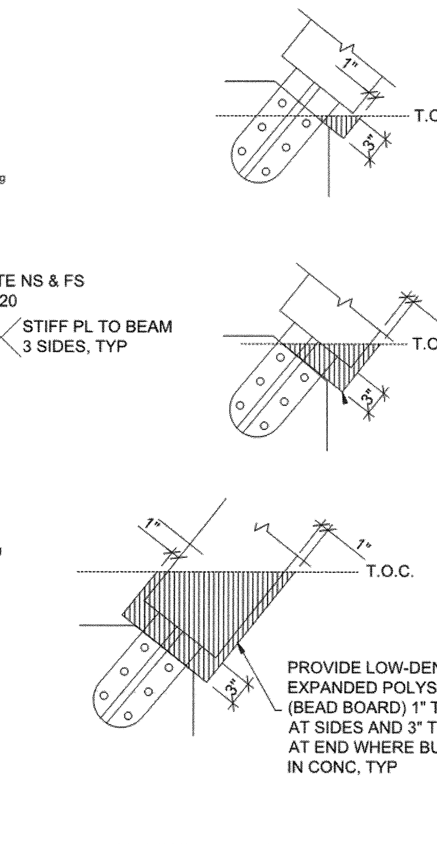

MAINTAIN 1" AT SIDE AND 3" AT END CLEARANCE BETWEEN CASING AND CONC, TYP.

TYPICAL CASING BURIED IN CONCRETE (6)

SCALE:NTS

NOTE:
PROVIDE BLOCKOUT MATERIAL IN HATCHED REGIONS AS SHOWN, DO NOT PLACE MATERIAL AROUND GUSSET OR CONNECTION REGION. (CONCRETE SHOULD NOT DIRECTLY CONTACT GUSSET)

CB-ID	EOR-ID	Line	Grids	Lvls	Mark	Qty	L_b	L_c	Casing Type	Casing H_c	Casing W_c	Casing t_c	W_L	W_1	L_{SL}	x_L	L_{Lg}	a	c	L_{Lc}	t_L
#	#		#	#	#	#	in	in	t,p	in	in	in	in	in	in	in	in	in	in	in	in
CB-3.00	BF-2c	C	3-2	L2-RF	1917	1	177 7/16	144.25	t	8	8	0.2500	7.38	4.42	22.35	3.33	9.35	4.00	3.00	9.33	0.50
CB-3.00	BF-2d	C	3-2	L2-RF	1917	1	177 7/16	144.25	t	8	8	0.2500	7.38	4.42	22.35	3.33	9.35	4.00	3.00	9.33	0.50
CB-3.50	BF-2a	C	3-2	L1-L2	1923	1	210 7/16	177.25	t	8	8	0.2500	7.38	5.01	22.35	4.07	9.35	4.00	3.00	10.07	0.50
CB-3.50	BF-2b	C	3-2	L1-L2	1923	1	210 7/16	177.25	t	8	8	0.2500	7.38	5.01	22.35	4.07	9.35	4.00	3.00	10.07	0.50
CB-2.75	BF-3a	A	3-4	L1-L2	1916	1	242 7/16	209.25	t	8	8	0.2500	7.38	4.12	22.35	2.96	9.35	4.00	3.00	8.96	0.50
CB-2.75	BF-3b	A	3-4	L1-L2	1916	1	242 7/16	209.25	t	8	8	0.2500	7.38	4.12	22.35	2.96	9.35	4.00	3.00	8.96	0.50
CB-3.75	BF-4a	5	D-F	L1-L2	1925	1	206 7/16	173.25	t	8	8	0.2500	7.38	5.30	22.65	4.44	9.35	4.00	3.00	10.74	0.50
CB-3.75	BF-4b	5	D-F	L1-L2	1925	1	206 7/16	173.25	t	8	8	0.2500	7.38	5.30	22.65	4.44	9.35	4.00	3.00	10.74	0.50
CB-3.25	BF-5a	5	H-J	L1-L2	1922	1	255 7/16	222.25	t	8	8	0.2500	7.38	4.71	22.35	3.70	9.35	4.00	3.00	9.70	0.50
CB-3.00	BF-6c	D	5.8-7	L2-RF	1918	1	203 7/16	170.25	t	8	8	0.2500	7.38	4.42	22.35	3.33	9.35	4.00	3.00	9.33	0.50
CB-3.00	BF-6d	D	5.8-7	L2-RF	1918	1	203 7/16	170.25	t	8	8	0.2500	7.38	4.42	22.35	3.33	9.35	4.00	3.00	9.33	0.50
CB-3.50	BF-6a	D	5.8-7	L1-L2	1924	1	241 7/16	208.25	t	8	8	0.2500	7.38	5.01	22.35	4.07	9.35	4.00	3.00	10.07	0.50
CB-3.50	BF-6b	D	5.8-7	L1-L2	1924	1	241 7/16	208.25	t	8	8	0.2500	7.38	5.01	22.35	4.07	9.35	4.00	3.00	10.07	0.50
CB-2.75	BF-7a	M	5-6.3	L1-L2	1915	1	226 7/16	193.25	t	8	8	0.2500	7.38	4.12	22.35	2.96	9.35	4.00	3.00	8.96	0.50
CB-2.75	BF-7b	M	5-6.3	L1-L2	1915	1	226 7/16	193.25	t	8	8	0.2500	7.38	4.12	22.35	2.96	9.35	4.00	3.00	8.96	0.50
CB-3.00	BF-8a	8	B.3-C.1	L1-L2	1919	1	214 7/16	181.25	t	8	8	0.2500	7.38	4.42	22.35	3.33	9.35	4.00	3.00	9.33	0.50
CB-3.00	BF-8b	8	B.3-C.1	L1-L2	1919	1	214 7/16	181.25	t	8	8	0.2500	7.38	4.42	22.35	3.33	9.35	4.00	3.00	9.33	0.50
CB-2.75	BF-9a	A	10-12	L1-L2	1914	1	199 7/16	166.25	t	8	8	0.2500	7.38	4.12	22.35	2.96	9.35	4.00	3.00	8.96	0.50
CB-2.75	BF-9b	A	10-12	L1-L2	1914	1	199 7/16	166.25	t	8	8	0.2500	7.38	4.12	22.35	2.96	9.35	4.00	3.00	8.96	0.50
CB-3.00	BF-11a	13	K-L	L1-L2	1921	1	268 7/16	235.25	t	8	8	0.2500	7.38	4.42	22.35	3.33	9.35	4.00	3.00	9.33	0.50
CB-3.00	BF-13a	14	A.7-B.8	L1-L2	1920	1	230 7/16	197.25	t	8	8	0.2500	7.38	4.42	22.35	3.33	9.35	4.00	3.00	9.33	0.50
CB-3.00	BF-13b	14	A.7-B.8	L1-L2	1920	1	230 7/16	197.25	t	8	8	0.2500	7.38	4.42	22.35	3.33	9.35	4.00	3.00	9.33	0.50
						22															

CB-ID	D_{wLg}	D_{wL}	L_{WL-l}	n_i	n_o	g	s	e	b_r	L_{ysc}	L'_{ysc}	W_{sc}	t_{sc}	A_{sc}	K_{eff}	K_f	F_{ysc} Min	F_{ysc} Max	P_{ysc}	Adusted Brace Strength Factors β	Adusted Brace Strength Factors ω	CB Wt
#	#	#	in	#	#	in	in	in	in	in	in	in	in	in^2	K/in	(K_{eff}/K_{Lwp})	ksi	ksi	kip	β	ω	lb
CB-3.00	3.00	3.00	3.33	2	0	0.00	5.00	1.63	0.96	126.08	126.08	4.000	0.75	3.00	587	1.41	38	46	114	1.17	1.28	1202
CB-3.00	3.00	3.00	3.33	2	0	0.00	5.00	1.63	0.96	126.08	126.08	4.000	0.75	3.00	587	1.41	38	46	114	1.17	1.28	1202
CB-3.50	3.00	3.00	4.07	2	0	0.00	5.00	1.63	0.96	157.60	157.60	4.667	0.75	3.50	561	1.35	38	46	133	1.16	1.21	1467
CB-3.50	3.00	3.00	4.07	2	0	0.00	5.00	1.63	0.96	157.60	157.60	4.667	0.75	3.50	561	1.35	38	46	133	1.16	1.21	1467
CB-2.75	3.00	3.00	2.96	2	0	0.00	5.00	1.63	0.96	191.82	191.82	3.667	0.75	2.75	377	1.29	40.6	46	112	1.17	1.26	1682
CB-2.75	3.00	3.00	2.96	2	0	0.00	5.00	1.63	0.96	191.82	191.82	3.667	0.75	2.75	377	1.29	40.6	46	112	1.17	1.26	1682
CB-3.75	3.00	3.00	4.44	2	0	0.00	5.00	1.63	0.96	152.26	152.26	5.000	0.75	3.75	616	1.38	38	41.6	143	1.17	1.24	1448
CB-3.75	3.00	3.00	4.44	2	0	0.00	5.00	1.63	0.96	152.26	152.26	5.000	0.75	3.75	616	1.38	38	41.6	143	1.17	1.24	1448
CB-3.25	3.00	3.00	3.70	2	0	0.00	5.00	1.63	0.96	203.34	203.34	4.333	0.75	3.25	417	1.28	38	41.6	124	1.17	1.24	1791
CB-3.00	3.00	3.00	3.33	2	0	0.00	5.00	1.63	0.96	152.08	152.08	4.000	0.75	3.00	497	1.38	38	46	114	1.18	1.29	1395
CB-3.00	3.00	3.00	3.33	2	0	0.00	5.00	1.63	0.96	152.08	152.08	4.000	0.75	3.00	497	1.38	38	46	114	1.18	1.29	1395
CB-3.50	3.00	3.00	4.07	2	0	0.00	5.00	1.63	0.96	188.60	188.60	4.667	0.75	3.50	480	1.29	38	46	133	1.17	1.24	1698
CB-3.50	3.00	3.00	4.07	2	0	0.00	5.00	1.63	0.96	188.60	188.60	4.667	0.75	3.50	480	1.29	38	46	133	1.17	1.24	1698
CB-2.75	3.00	3.00	2.96	2	0	0.00	5.00	1.63	0.96	175.82	175.82	3.667	0.75	2.75	407	1.33	40.6	46	112	1.17	1.28	1563
CB-2.75	3.00	3.00	2.96	2	0	0.00	5.00	1.63	0.96	175.82	175.82	3.667	0.75	2.75	407	1.33	40.6	46	112	1.17	1.28	1563
CB-3.00	3.00	3.00	3.33	2	0	0.00	5.00	1.63	0.96	163.08	163.08	4.000	0.75	3.00	469	1.34	38	46	114	1.17	1.23	1476
CB-3.00	3.00	3.00	3.33	2	0	0.00	5.00	1.63	0.96	163.08	163.08	4.000	0.75	3.00	469	1.34	38	46	114	1.17	1.23	1476
CB-2.75	3.00	3.00	11.96	2	0	0.00	5.00	1.63	0.96	148.82	148.82	3.667	0.75	2.75	471	1.40	40.6	46	112	1.17	1.25	1364
CB-2.75	3.00	3.00	11.96	2	0	0.00	5.00	1.63	0.96	148.82	148.82	3.667	0.75	2.75	471	1.40	40.6	46	112	1.17	1.25	1364
CB-3.00	3.00	3.00	3.33	2	0	0.00	5.00	1.63	0.96	217.08	217.08	4.000	0.75	3.00	364	1.25	38	46	114	1.17	1.23	1875
CB-3.00	3.00	3.00	3.33	2	0	0.00	5.00	1.63	0.96	179.08	179.08	4.000	0.75	3.00	431	1.31	40.6	46	122	1.17	1.24	1594
CB-3.00	3.00	3.00	3.33	2	0	0.00	5.00	1.63	0.96	179.08	179.08	4.000	0.75	3.00	431	1.31	40.6	46	122	1.17	1.24	1594

Sum --> 66,660 lbs
Max --> 1,875 lbs

Table of Symbols

- L_b = Length of CB tip to tip
- L_c = Length of casing
- **Casing** = Size & type of casing
- **Type** = t = tube (HSS) and p = pipe
- W_L = Width of Lug
- W_1 = Width at Reduced Section of Lug
- L_{SL} = Total Length of Lug minus Transition (xL)
- x_L = Length from start of lug transition to end of lug transition
- L_{Lg} = Length of Lap on Gusset
- **a** = Gap between core and gusset
- **c** = Core extension length out of casing
- L_{Lc} = Length of Lug within Casing (incl. xL)
- t_L = Thickness of lug
- D_{wLg} = Size of weld at lug to core at bolt pattern # 1/16ths
- D_{wL} = Size of weld at lug to core beyond bolt pattern # 1/16ths
- L_{WL-l} = Weld length required at inside face of lug
- n_i = Number of bolts in inner row
- n_o = Number of bolts in outer row
- **g** = Gauge between outer & inner bolt rows
- **s** = Bolt Spacing
- **e** = Typical bolt edge distance
- b_r = Distance to start of radius from first outermost bolt. (If negative it is towards end of CB from bolt.)
- L_{ysc} = Length of yielding core w/out allowance for Cntr Stiffener
- L'_{ysc} = Yield length of core - Yielding Portion Only
- W_{sc} = Width of core at yield section
- t_{sc} = Thickness of core
- A_{sc} = Cross sectional area of core at yield section
- K_{eff} = Effective Stiffness of BRB from WP to WP
- K_f = Axial Stiffness Adjustment Factor
- P_{ysc} = Yield force of CB (A_{sc} x F_{ysc}_min)
- F_{ysc} = Specified yield stress range of core plate

COREBRACE BOLTED BRB PROPERTIES SCHEDULE (11)

SCALE:NTS

NOTES:
1. BRB CORE PL SHALL BE ASTM A36 MATERIAL SELECTED TO PROVIDE A YEILD STRENGTH OF THE MATERIAL THAT FALLS WITHIN THE RANGE LISTED IN THE TABLE.
2. LUG PL SHALL BE A572 GR-50, CASINGS SHALL BE A500 GR-B OR A53 GR-B.
3. BRB SUPPLIER SHALL PROVIDE TEST REULTS FOR SIMILAR BRACE IN ACCORDANCE IWTH AISC 341-10
4. BRB SUPPLIER SHALL PROVIDE TESTED MATERIAL ADJUSTEMENT FACTOR FOR COMPRESSION STRENGTH (β) AND STRAIN HARDENING (ω). VALUES NOT TO EXCEED THOSE SHOWN IN THE TABLE.
5. STIFFNESS MODIFICATION FACTORS (Kf) ARE ACTUAL VALUES. ACTUAL VALUES TO BE WITHIN ±10% OF DESIGN VALUES. ACTUAL STIFFNESS WP-WP (Keff) CALCULATED AS : Keff = Kf*Asc*E/Lwp WHERE Lwp IS THE WP - WP LENGTH AND Asc IS THE SPECIFIED CORE ARE.
6. MINIMUM STROKE TO OCCUR AT EACH END OF BRACE IN TENSION AND COMPRESSION DIRECTIONS. CORE EXTENSION TO REMAIN STABLE OVER 2X THIS LENGHT.

CB-ID	EOR-ID	Line	Grids	Lvls	Mark	Qty	W_{WP}	H_{WP}	L_{bh}	L_{wp-h}	Hole Pattern n_i	n_o	e	s	g_i	g_o	d_{hg}	Gusset t_g	$F_{y,g\&r}$	Lug W_L	t_L	t_s	L_{Lg}	W_{L-Alt}
#	#		#	#	#	#	in	in	in	in	#	#	in	in	in	in	in	in	ksi	in	in	in	in	in
CB-3.00	BF-2c	C	3-2	L2-RF	1917	1	118 8/16	171 12/16	172	17	2	0	1 10/16	5.00	2 1/16	0	1 3/16	3/4	50	7 3/8	1/2	3/4	9 6/16	1/2
CB-3.00	BF-2d	C	3-2	L2-RF	1917	1	118 8/16	171 12/16	172	17	2	0	1 10/16	5.00	2 1/16	0	1 3/16	3/4	50	7 3/8	1/2	3/4	9 6/16	1/2
CB-3.50	BF-2a	C	3-2	L1-L2	1923	1	118 8/16	212 12/16	205	21 8/16	2	0	1 10/16	5.00	2 1/16	0	1 3/16	1	50	7 3/8	1/2	3/4	9 6/16	9/16
CB-3.50	BF-2b	C	3-2	L1-L2	1923	1	118 8/16	212 12/16	205	21 8/16	2	0	1 10/16	5.00	2 1/16	0	1 3/16	1	50	7 3/8	1/2	3/4	9 6/16	9/16
CB-2.75	BF-3a	A	3-4	L1-L2	1916	1	170 8/16	212 12/16	237	16 8/16	2	0	1 10/16	5.00	2 1/16	0	1 3/16	3/4	50	7 3/8	1/2	3/4	9 6/16	1/2
CB-2.75	BF-3b	A	3-4	L1-L2	1916	1	170 8/16	212 12/16	237	16 8/16	2	0	1 10/16	5.00	2 1/16	0	1 3/16	3/4	50	7 3/8	1/2	3/4	9 6/16	1/2
CB-3.75	BF-4a	5	D-F	L1-L2	1925	1	122 8/16	209 12/16	201	21	2	0	1 10/16	5.00	2 1/16	0	1 3/16	1	50	7 3/8	1/2	3/4	9 6/16	9/16
CB-3.75	BF-4b	5	D-F	L1-L2	1925	1	122 8/16	209 12/16	201	21	2	0	1 10/16	5.00	2 1/16	0	1 3/16	1	50	7 3/8	1/2	3/4	9 6/16	9/16
CB-3.25	BF-5a	5	H-J	L1-L2	1922	1	199	209 12/16	250	15	2	0	1 10/16	5.00	2 1/16	0	1 3/16	3/4	50	7 3/8	1/2	3/4	9 6/16	1/2
CB-3.00	BF-6c	D	5.8-7	L2-RF	1918	1	169	171 12/16	198	20	2	0	1 10/16	5.00	2 1/16	0	1 3/16	7/8	50	7 3/8	1/2	3/4	9 6/16	9/16
CB-3.00	BF-6d	D	5.8-7	L2-RF	1918	1	169	171 12/16	198	20	2	0	1 10/16	5.00	2 1/16	0	1 3/16	7/8	50	7 3/8	1/2	3/4	9 6/16	9/16
CB-3.50	BF-6a	D	5.8-7	L1-L2	1924	1	169	212 12/16	236	17	2	0	1 10/16	5.00	2 1/16	0	1 3/16	1	50	7 3/8	1/2	3/4	9 6/16	9/16
CB-3.50	BF-6b	D	5.8-7	L1-L2	1924	1	169	212 12/16	236	17	2	0	1 10/16	5.00	2 1/16	0	1 3/16	1	50	7 3/8	1/2	3/4	9 6/16	9/16
CB-2.75	BF-7a	M	5-6.3	L1-L2	1915	1	155	209 12/16	221	17 8/16	2	0	1 10/16	5.00	2 1/16	0	1 3/16	7/8	50	7 3/8	1/2	3/4	9 6/16	1/2
CB-2.75	BF-7b	M	5-6.3	L1-L2	1915	1	155	209 12/16	221	17 8/16	2	0	1 10/16	5.00	2 1/16	0	1 3/16	7/8	50	7 3/8	1/2	3/4	9 6/16	1/2
CB-3.00	BF-8a	8	B.3-C.1	L1-L2	1919	1	130 8/16	211 4/16	209	20	2	0	1 10/16	5.00	2 1/16	0	1 3/16	7/8	50	7 3/8	1/2	3/4	9 6/16	1/2
CB-3.00	BF-8b	8	B.3-C.1	L1-L2	1919	1	130 8/16	211 4/16	209	20	2	0	1 10/16	5.00	2 1/16	0	1 3/16	7/8	50	7 3/8	1/2	3/4	9 6/16	1/2
CB-2.75	BF-9a	A	10-12	L1-L2	1914	1	109 8/16	209 12/16	194	23	2	0	1 10/16	5.00	2 1/16	0	1 3/16	1	50	7 3/8	1/2	3/4	9 6/16	1/2
CB-2.75	BF-9b	A	10-12	L1-L2	1914	1	109 8/16	209 12/16	194	23	2	0	1 10/16	5.00	2 1/16	0	1 3/16	1	50	7 3/8	1/2	3/4	9 6/16	1/2
CB-3.00	BF-11a	13	K-L	L1-L2	1921	1	209	212 12/16	263	15	2	0	1 10/16	5.00	2 1/16	0	1 3/16	3/4	50	7 3/8	1/2	3/4	9 6/16	1/2
CB-3.00	BF-13a	14	A.7-B.8	L1-L2	1920	1	160 8/16	209 12/16	225	17	2	0	1 10/16	5.00	2 1/16	0	1 3/16	7/8	50	7 3/8	1/2	3/4	9 6/16	1/2
CB-3.00	BF-13b	14	A.7-B.8	L1-L2	1920	1	160 8/16	209 12/16	225	17	2	0	1 10/16	5.00	2 1/16	0	1 3/16	7/8	50	7 3/8	1/2	3/4	9 6/16	1/2
						22																		

CB-ID	Bolt d_b	G	L'	La	3.50" Qty	3.75" Qty	Bottom Bm/Col Flange Bot W_b	L_{wb}	W_c	L_{wc}	L_{gb}	L_{gc}	V Bot W_b	L_{wb}	L_{gb}	L_{gc}
#	in	in	in	in	Qty	Qty	in	in	in	in	in	in	in	in	in	in
CB-3.00	1 1/8	1.81	3.490	3 1/2	8	-	-	-	-	-	-	-	1/4	17	18	14
CB-3.00	1 1/8	1.81	3.490	3 1/2	8	-	-	-	-	-	-	-	1/4	17	18	14
CB-3.50	1 1/8	2.06	3.740	3 3/4	-	8	5/16	11	5/16	24	13	26	-	-	-	-
CB-3.50	1 1/8	2.06	3.740	3 3/4	-	8	5/16	11	5/16	24	13	26	-	-	-	-
CB-2.75	1 1/8	1.81	3.490	3 1/2	8	-	1/4	11	1/4	18	13	20	-	-	-	-
CB-2.75	1 1/8	1.81	3.490	3 1/2	8	-	1/4	11	1/4	18	13	20	-	-	-	-
CB-3.75	1 1/8	2.06	3.740	3 3/4	-	8	5/16	11	5/16	24	13	26	-	-	-	-
CB-3.75	1 1/8	2.06	3.740	3 3/4	-	8	5/16	11	5/16	24	13	26	-	-	-	-
CB-3.25	1 1/8	1.81	3.490	3 1/2	8	-	1/4	12	1/4	16	14	18	-	-	-	-
CB-3.00	1 1/8	1.94	3.615	3 3/4	-	8	-	-	-	-	-	-	5/16	21	22	14
CB-3.00	1 1/8	1.94	3.615	3 3/4	-	8	-	-	-	-	-	-	5/16	21	22	14
CB-3.50	1 1/8	2.06	3.740	3 3/4	-	8	5/16	12	5/16	19	14	21	-	-	-	-
CB-3.50	1 1/8	2.06	3.740	3 3/4	-	8	5/16	12	5/16	19	14	21	-	-	-	-
CB-2.75	1 1/8	1.94	3.615	3 3/4	-	8	5/16	11	5/16	20	13	22	-	-	-	-
CB-2.75	1 1/8	1.94	3.615	3 3/4	-	8	5/16	11	5/16	20	13	22	-	-	-	-
CB-3.00	1 1/8	1.94	3.615	3 3/4	-	8	5/16	11	5/16	23	13	25	-	-	-	-
CB-3.00	1 1/8	1.94	3.615	3 3/4	-	8	5/16	11	5/16	23	13	25	-	-	-	-
CB-2.75	1 1/8	2.06	3.740	3 3/4	-	8	5/16	11	5/16	26	13	28	-	-	-	-
CB-2.75	1 1/8	2.06	3.740	3 3/4	-	8	5/16	11	5/16	26	13	28	-	-	-	-
CB-3.00	1 1/8	1.81	3.490	3 1/2	8	-	1/4	12	1/4	16	14	18	-	-	-	-
CB-3.00	1 1/8	1.94	3.615	3 3/4	-	8	5/16	11	5/16	19	13	21	-	-	-	-
CB-3.00	1 1/8	1.94	3.615	3 3/4	-	8	5/16	11	5/16	19	13	21	-	-	-	-
					320	48										

CB-ID	Top Bm/Col Flange Top W_b	L_{wb}	W_c	L_{wc}	L_{gb}	L_{gc}	Chev Λ W_b	L_{wb}	L_{gb}	L_{gc}	Required Stiff or CP BM Bot	Col Bot	BM Top	Col Top	CB Wt	Total CB Wt
#	in	in	in	in	in	in	in	in	in	in	Bot	Bot	Top	Top	lb	lb
CB-3.00	1/4	12	1/4	12	14	14	-	-	-	-	**	-	-	-	1202	1202
CB-3.00	1/4	12	1/4	12	14	14	-	-	-	-	**	-	-	-	1202	1202
CB-3.50	-	-	-	-	-	-	5/16	15	16	14	-	-	**	-	1467	1467
CB-3.50	-	-	-	-	-	-	5/16	15	16	14	-	-	**	-	1467	1467
CB-2.75	-	-	-	-	-	-	1/4	19	20	14	-	-	**	-	1682	1682
CB-2.75	-	-	-	-	-	-	1/4	19	20	14	-	-	**	-	1682	1682
CB-3.75	-	-	-	-	-	-	5/16	17	18	14	-	-	**	-	1448	1448
CB-3.75	-	-	-	-	-	-	5/16	17	18	14	-	-	**	-	1448	1448
CB-3.25	1/4	18	1/4	12	20	14	-	-	-	-	-	-	-	-	1791	1791
CB-3.00	5/16	17	5/16	12	19	14	-	-	-	-	**	-	-	-	1395	1395
CB-3.00	5/16	17	5/16	12	19	14	-	-	-	-	**	-	-	-	1395	1395
CB-3.50	-	-	-	-	-	-	5/16	19	20	14	-	-	**	-	1698	1698
CB-3.50	-	-	-	-	-	-	5/16	19	20	14	-	-	**	-	1698	1698
CB-2.75	-	-	-	-	-	-	5/16	20	21	14	-	-	**	-	1563	1563
CB-2.75	-	-	-	-	-	-	5/16	20	21	14	-	-	**	-	1563	1563
CB-3.00	-	-	-	-	-	-	5/16	17	18	14	-	-	**	-	1476	1476
CB-3.00	-	-	-	-	-	-	5/16	17	18	14	-	-	**	-	1476	1476
CB-2.75	-	-	-	-	-	-	5/16	16	17	13	-	-	**	-	1364	1364
CB-2.75	-	-	-	-	-	-	5/16	16	17	13	-	-	**	-	1364	1364
CB-3.00	1/4	15	1/4	12	17	14	-	-	-	-	-	-	-	-	1875	1875
CB-3.00	-	-	-	-	-	-	5/16	20	21	14	-	-	**	-	1594	1594
CB-3.00	-	-	-	-	-	-	5/16	20	21	14	-	-	**	-	1594	1594
																66,660 lbs
																33.33 Ton

Note: May Dbl Count Stiffeners. Indicated Thickness Each Side of Column. Weld Stiffener to FL and Web with 5/16" fillet welds for stiffener t ≤ 1.25", 7/16" for t ≤ 2.0"
CP = Cont Plate & Guss Stiff PL
*** = Stiffener PL Req'd Per Detail (Chev or V Location)*

Table of Symbols

- W_{WP} = Width of frame bay workpoint (WP) to WP
- H_{WP} = Height of frame bay WP to WP
- L_{bh} = Length of CoreBrace between outermost holes
- L_{wp-h} = Length from bottom WP to center of bottom bolt hole
- n_i = Number of bolts in inner row
- n_o = Number of bolts in outer row
- **e** = Typical bolt edge distance
- **s** = Bolt spacing in a row
- g_i = Gauge inner bolt row from CL of CB
- g_o = Gauge between inner and outer bolt rows
- d_{hg} = Diameter of bolt hole in gusset plate
- t_g = Thickness of gusset
- t_{rg} = Thickness of repad on gusst
- W_{rg} = Weld size at repad to gusset
- $F_{y,g\&r}$ = Gusset & repad A572 grade
- t_L = Thickness of Lug
- t_s = Thickness of Stiffener on Lug
- L_{Lg} = Expected Lap of Lug on Gusset (as Check Only)
- W_{L-Alt} = Alternate continuous weld at lug to gusset
- d_b = Bolt diameter (ASTM F3125 Gr A490/F2280)
- **G** = Grip of bolt
- **L'** = Length of bolt needed with F436 washer only
- **La** = Suggested length of bolt to order, detailer to verify
- W_b = Minimum size of gusset weld to beam
- L_{wb} = Minimum length of beam weld
- W_c = Minimum size of gusset weld to column
- L_{wc} = Minimum length of column weld
- L_{gb} = Approximate maximum width of gusset rounded up to nearest inch (At V or Chev, equal to 1/2 gusset width)
- L_{gc} = Approximate maximum height of gusset rounded up to nearest inch

COREBRACE GUSSET CONNECTION SCHEDULE - BOLTED BRACES (10)

SCALE:NTS

NOTES:
1. ALL GUSSET AND REPAD PL SHALL BE A572 GR-50 U.N.O.
2. USE ASTM F3125 Gr A490-SC/F2280-TC BOLTS. BOLT HOLES IN GUSSET SHALL NOT BE OVERSIZED.
3. CLASS A (TOOL CLEAN) ALL FAYING SURFACES.
4. ALL STIFFENERS TO MATCH BEAM AND COLUMN GRADE.
5. GUSSET PLATE SIZES SHOWN IN TABLE ARE MINIMUMS, SEE ANCHOR BOLT AND BEAM CONNECTION DETAILS FOR ADDITIONAL SIZE REQUIREMENTS.
6. FINAL GUSSET AND WELD SIZES TO BE COORDINATED WITH COREBRACE.

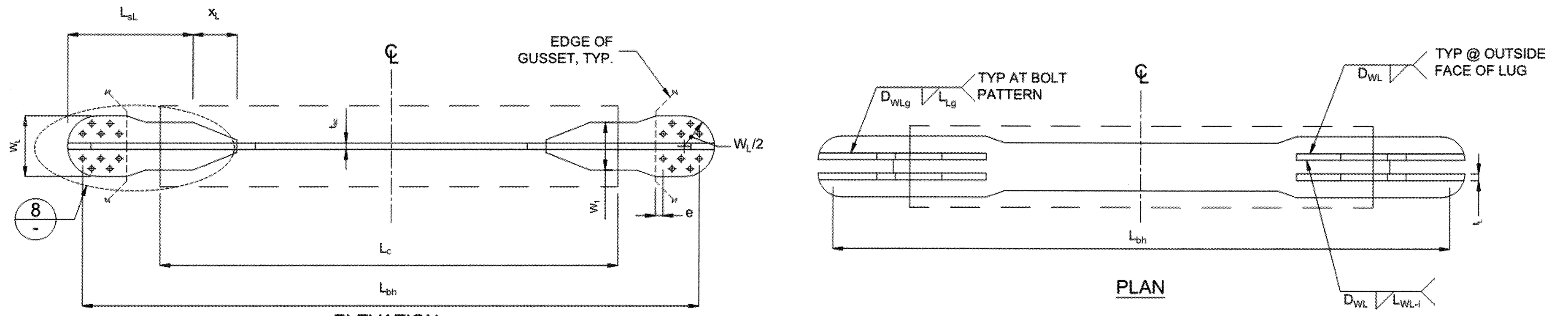

FLAT CORE PLATE DETAIL (7)

SCALE:NTS

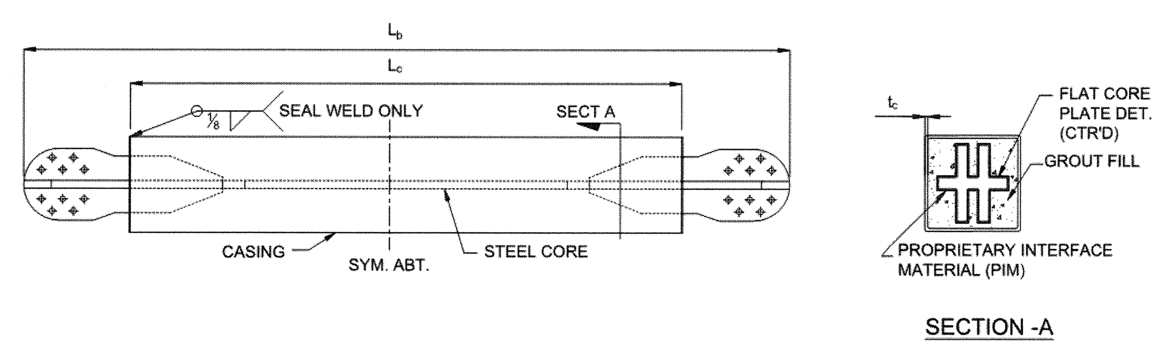

BUCKLING RESTRAINED BRACE DETAIL (9)

SCALE:NTS

HPI architecture
www.hpiarchitecture.com
115 22nd street
Newport Beach, CA 92663
o: 949. 675. 6442

CONSULTANTS
MHP STRUCTURAL ENGINEERS
3900 Cover Street
Long Beach, CA 90808
562.985.3200 P
562.985.1011 F
MHP JN 14-0451-00

REGISTERED PROFESSIONAL ENGINEER TERRY FERNANDEZ No. S2[illegible] Exp. 03-31-19 STRUCTURAL STATE OF CALIFORNIA 8-21-18

SEALS / APPROVALS

LICENSED ARCHITECT LAWRENCE A. FRAPWELL NO. C 11380 Ren. 6-30-19 STATE OF CALIFORNIA

IDENTIFICATION STAMP
DIV. OF THE STATE ARCHITECT
FILE: 30-C2
A# 04-116810
AC — FLS — SS TY
DATE AUG 3 1 2018

PROJECT TITLE

JOHNSON STUDENT CENTER
INCREMENT 2
1530 W 17TH ST SANTA ANA CA 92706

RANCHO SANTIAGO Community College District

SUBMITTALS		
#	DATE	DESCRIPTION
	08/13/2018	DSA FINAL SUBMITTAL

PROJECT IDENTIFICATION Project Number

THESE DRAWINGS ORIGINALLY CREATED IN AUTODESK REVIT V. 2016 U.O.N.

THE ORIGINAL SIZE OF THIS SHEET IS 30" X 42".

DRAWN BY JA / SMA / AM

CHECKED BY DCF

THESE DRAWINGS AND SPECIFICATIONS ARE THE PROPERTY AND COPYRIGHT OF THE ARCHITECT AND SHALL NOT BE USED ON ANY OTHER PROJECT OR LOCATIONS EXCEPT AS DESCRIBED ON THE DRAWINGS, WITHOUT WRITTEN AGREEMENT WITH THE ARCHITECT.

© HILL PARTNERSHIP INC. 2017

SHEET TITLE

COREBRACE SECTIONS AND DETAILS

SHEET NUMBER

S5.20A

DSA FINAL SUBMITTAL

D:\Revit Local Files\14-0451-00_SA College Johnson Center_R16_Struc_jarciaga.rvt 8/21/2018 4:40:18 PM

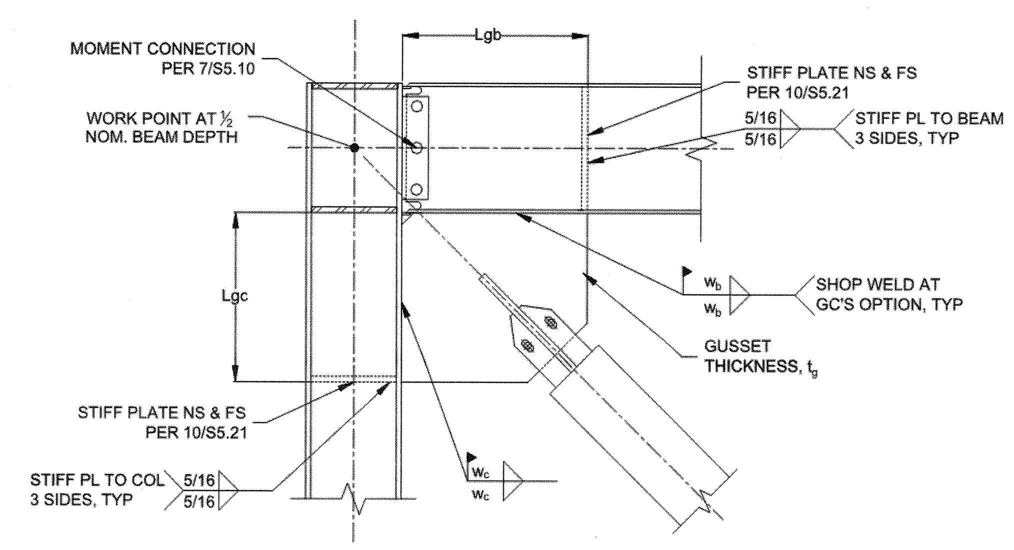

STRONG AXIS COLUMN

(SIM WITH BRACE AT OPPOSITE SIDE OF COLUMN WEB)

BRB AT ROOF (4)

SCALE:NTS

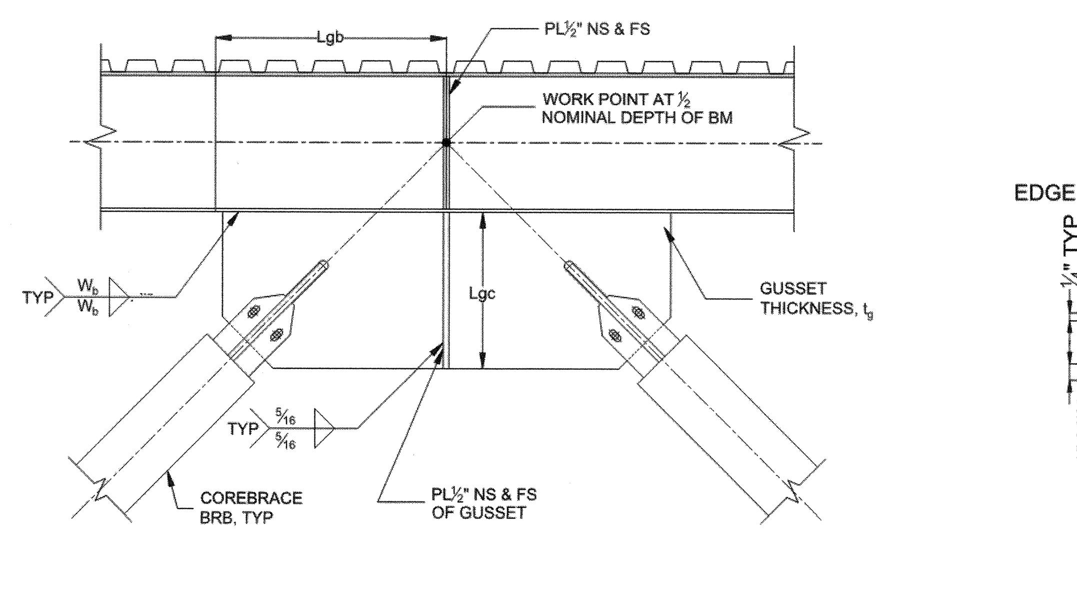

(SIM WITH BRACES ABOVE BEAM)

BRB AT CHEVRON (3)

SCALE:NTS

NOTE: REFERENCE DETAIL 1 FOR ADDITIONAL INFORMATION. FIELD INSTALL GUSSET STIFFENER AS REQUIRED FOR BRB INSTALL

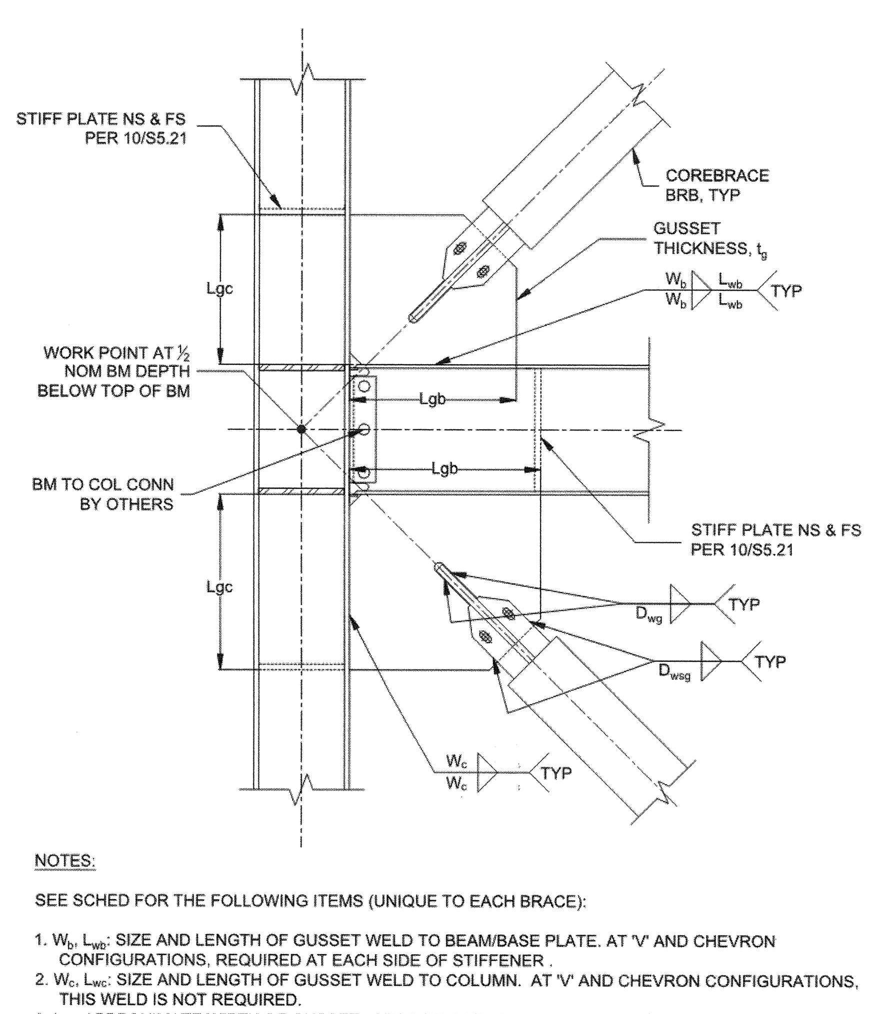

NOTES:

SEE SCHED FOR THE FOLLOWING ITEMS (UNIQUE TO EACH BRACE):

1. W_b, L_{wb}: SIZE AND LENGTH OF GUSSET WELD TO BEAM/BASE PLATE. AT 'V' AND CHEVRON CONFIGURATIONS, REQUIRED AT EACH SIDE OF STIFFENER .
2. W_c, L_{wc}: SIZE AND LENGTH OF GUSSET WELD TO COLUMN. AT 'V' AND CHEVRON CONFIGURATIONS, THIS WELD IS NOT REQUIRED.
3. L_{gb}: APPROXIMATE WIDTH OF GUSSET. AT 'V' OR CHEVRON CONFIGURATIONS APPROXIMATE WIDTH OF HALF GUSSET (FROM EDGE TO CL OF STIFFENER).
4. L_{gc}: APPROX. HEIGHT OF GUSSET.
5. t_g: GUSSET THICKNESS

BRB ABOVE & BELOW BEAM (1)

SCALE:NTS

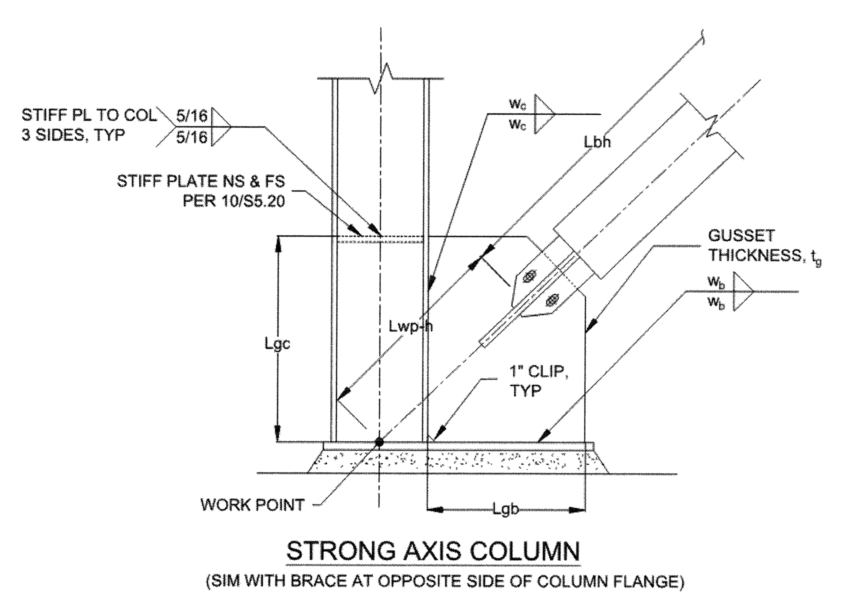

STRONG AXIS COLUMN

(SIM WITH BRACE AT OPPOSITE SIDE OF COLUMN FLANGE)

BRB AT BASEPLATE (2)

SCALE:NTS

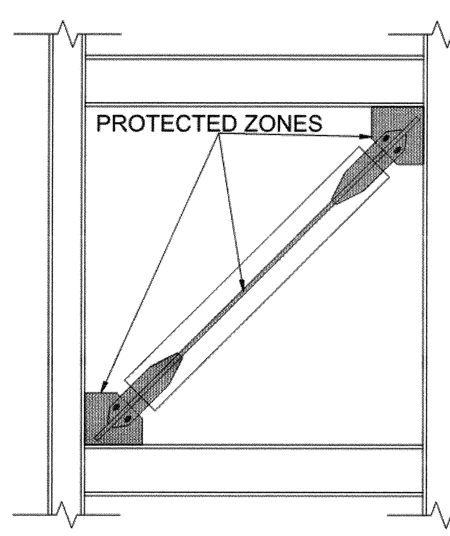

BRB PROTECTED ZONES SHALL INCLUDE THE STEEL CORE AND CONNECTION ELEMENTS AND SHALL SATISFY THE REQUIREMENTS OF SECTION F4.5c OF AISC 341-10. ADDITIONALLY, ATTACHMENTS WHICH PENETRATE THE CASING (SCREWS, PAF, ETC) OR ANY ATTACHMENT SUPPORTING OVER 50 LBS SHALL BE APPROVED BY THE ENGINEER OF RECORD AND THE BRB MANUFACTURER. ALTERATIONS OR SHOT PINS NOT PERMITTED IN PROTECTED ZONES.

PROTECTED ZONES DETAIL (5)

SCALE:NTS

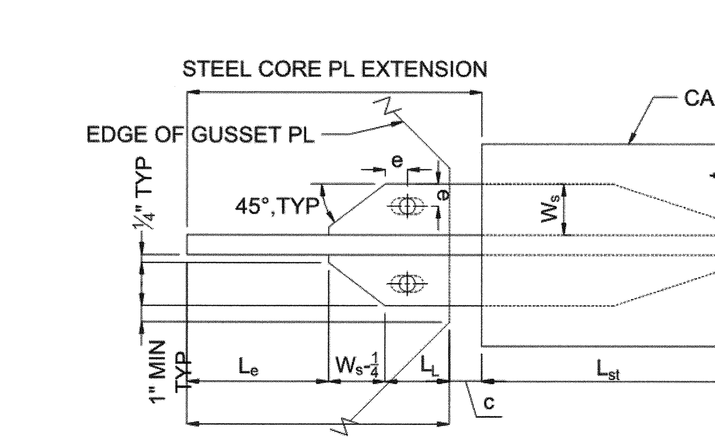

TYPICAL END CONNECTION DETAIL (8)

SCALE:NTS

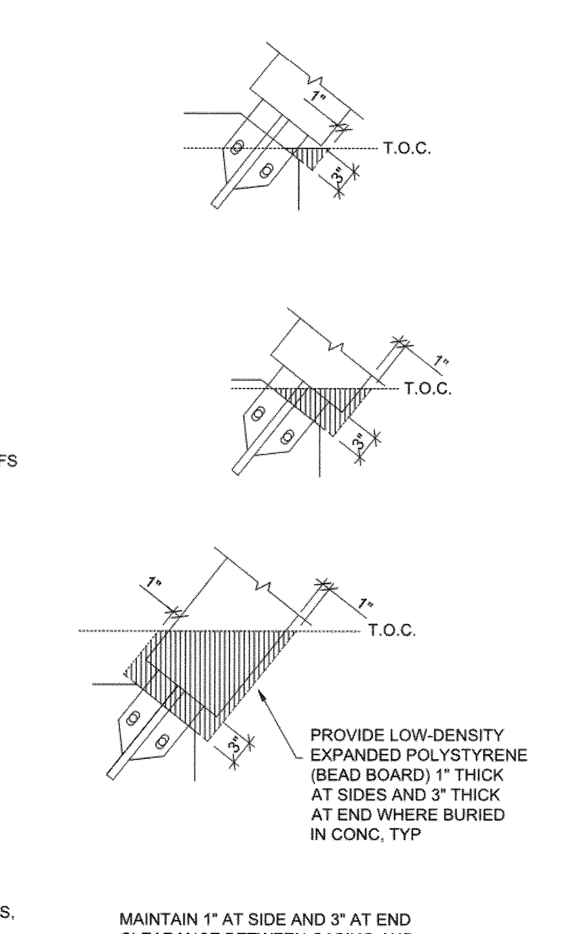

MAINTAIN 1" AT SIDE AND 3" AT END CLEARANCE BETWEEN CASING AND CONC, TYP.

TYPICAL CASING BURIED IN CONCRETE (6)

SCALE:NTS

NOTE:
PROVIDE BLOCKOUT MATERIAL IN HATCHED REGIONS AS SHOWN, DO NOT PLACE MATERIAL AROUND GUSSET OR CONNECTION REGION. (CONCRETE SHOULD NOT DIRECTLY CONTACT GUSSET)

CB-ID #	EOR-ID #	Line	Grids #	Lvls #	Mark #	Qty #	L_b in	d_h in	L_c in	Casing Type t,p	Casing W_c in	Casing H_c in	Casing t_c in	n_s	e in	c in	W_s in	L_{st} in	t_s in	L_e in	D_{ws} #/16"	L_{ysc} in	L'_{ysc} in	W_{so} in	W_{sc} in	t_{sc} in	A_{sc} in²	K_{eff} K/in	K_f (K_{eff}/K_{Lwp})	P_{ysc} kip	F_{ysc} Min ksi	F_{ysc} Max ksi	Adusted Brace Strength Factors β	Adusted Brace Strength Factors ω	CB Wt lb
CB-2.00	BF-1c	1	A-B	L2-RF	1905	1	193 13/16	11/16	171 5/16	t	8	8	0.2500	1.50	7/8	3.00	2	16.38	0.38	3 4/16	3	139.07	139.07	2.58	4.000	0.50	2.00	340	1.34	76	38	45	1.07	1.54	1268
CB-2.00	BF-1d	1	A-B	L2-RF	1905	1	193 13/16	11/16	171 5/16	t	8	8	0.2500	1.50	7/8	3.00	2	16.38	0.38	3 4/16	3	139.07	139.07	2.58	4.000	0.50	2.00	340	1.34	76	38	45	1.07	1.54	1268
CB-2.50	BF-1a	1	A-B	L1-L2	1913	1	224 12/16	11/16	200 4/16	t	8	8	0.2500	1.50	7/8	3.00	2	11.88	0.38	4 4/16	3	176.98	162.23	2.61	3.333	0.75	2.50	362	1.28	95	38	45	1.05	1.50	1518
CB-2.50	BF-1b	1	A-B	L1-L2	1913	1	224 12/16	11/16	200 4/16	t	8	8	0.2500	1.50	7/8	3.00	2	11.88	0.38	4 4/16	3	176.98	162.23	2.61	3.333	0.75	2.50	362	1.28	95	38	45	1.05	1.50	1518
CB-2.50	BF-3c	A	3-4	L2-RF	1912	1	208 2/16	11/16	183 10/16	t	8	8	0.2500	1.60	7/8	3.00	2 8/16	11.63	0.38	2 12/16	3	160.85	146.10	2.69	3.333	0.75	2.50	397	1.33	95	38	45	1.08	1.55	1401
CB-2.50	BF-3d	A	3-4	L2-RF	1912	1	208 2/16	11/16	183 10/16	t	8	8	0.2500	1.60	7/8	3.00	2 8/16	11.63	0.38	2 12/16	3	160.85	146.10	2.69	3.333	0.75	2.50	397	1.33	95	38	45	1.08	1.55	1401
CB-2.00	BF-4c	5	D-F	L2-RF	1903	1	177 8/16	11/16	155	t	8	8	0.2500	1.50	7/8	3.00	2	16.38	0.38	3 4/16	3	122.77	122.77	2.58	4.000	0.50	2.00	375	1.38	76	38	45	1.08	1.54	1151
CB-2.00	BF-4d	5	D-F	L2-RF	1903	1	177 8/16	11/16	155	t	8	8	0.2500	1.50	7/8	3.00	2	16.38	0.38	3 4/16	3	122.77	122.77	2.58	4.000	0.50	2.00	375	1.38	76	38	45	1.08	1.54	1151
CB-2.00	BF-5b	5	H-J	L2-RF	1907	1	220 3/16	11/16	197 11/16	t	8	8	0.2500	1.50	7/8	3.00	2	16.38	0.38	3 4/16	3	165.42	165.42	2.58	4.000	0.50	2.00	291	1.33	76	38	45	1.06	1.53	1458
CB-2.00	BF-7g	M	6.3-7	L2-RF	1902	1	174 8/16	11/16	152	t	8	8	0.2500	1.50	7/8	3.00	2	16.38	0.38	3 4/16	3	119.74	119.74	2.58	4.000	0.50	2.00	382	1.38	76	38	45	1.07	1.54	1129
CB-2.00	BF-7h	M	6.3-7	L2-RF	1902	1	174 8/16	11/16	152	t	8	8	0.2500	1.50	7/8	3.00	2	16.38	0.38	3 4/16	3	119.74	119.74	2.58	4.000	0.50	2.00	382	1.38	76	38	45	1.07	1.54	1129
CB-2.00	BF-7e	M	5-6.3	L2-RF	1906	1	194 4/16	11/16	169 12/16	t	8	8	0.2500	1.50	7/8	3.00	2 6/16	17.31	0.38	3 5/16	3	135.62	135.62	2.64	4.000	0.50	2.00	347	1.40	76	38	45	1.10	1.57	1264
CB-2.00	BF-7f	M	5-6.3	L2-RF	1906	1	194 4/16	11/16	169 12/16	t	8	8	0.2500	1.50	7/8	3.00	2 6/16	17.31	0.38	3 5/16	3	135.62	135.62	2.64	4.000	0.50	2.00	347	1.40	76	38	45	1.10	1.57	1264
CB-2.50	BF-7c	M	6.3-7	L1-L2	1911	1	204 2/16	11/16	179 10/16	t	8	8	0.2500	1.50	7/8	3.00	2	12.18	0.38	4 4/16	3	155.80	141.05	2.61	3.333	0.75	2.50	403	1.33	95	38	45	1.05	1.49	1366
CB-2.50	BF-7d	M	6.3-7	L1-L2	1911	1	204 2/16	11/16	179 10/16	t	8	8	0.2500	1.50	7/8	3.00	2	12.18	0.38	4 4/16	3	155.80	141.05	2.61	3.333	0.75	2.50	403	1.33	95	38	45	1.05	1.49	1366
CB-2.00	BF-8c	8	B.3-C.1	L2-RF	1904	1	182	11/16	159 8/16	t	8	8	0.2500	1.50	7/8	3.00	2 6/16	17.31	0.38	2 5/16	3	125.35	125.35	2.64	4.000	0.50	2.00	372	1.39	76	38	45	1.09	1.55	1189
CB-2.00	BF-8d	8	B.3-C.1	L2-RF	1904	1	182	11/16	159 8/16	t	8	8	0.2500	1.50	7/8	3.00	2 6/16	17.31	0.38	2 5/16	3	125.35	125.35	2.64	4.000	0.50	2.00	372	1.39	76	38	45	1.09	1.55	1189
CB-2.50	BF-9c	A	10-12	L2-RF	1910	1	168 6/16	11/16	143 14/16	t	8	8	0.2500	1.60	7/8	3.00	2 12/16	12.55	0.38	2 2/16	3	119.30	104.55	2.73	3.333	0.75	2.50	514	1.45	95	38	45	1.13	1.58	1111
CB-2.50	BF-9d	A	10-12	L2-RF	1910	1	168 6/16	11/16	143 14/16	t	8	8	0.2500	1.60	7/8	3.00	2 12/16	12.55	0.38	2 2/16	3	119.30	104.55	2.73	3.333	0.75	2.50	514	1.45	95	38	45	1.13	1.58	1111
CB-2.00	BF-10b	13	F.6-G.4	L2-RF	1906	1	194 1/16	11/16	171 9/16	t	8	8	0.2500	1.50	7/8	3.00	2	16.38	0.38	3 4/16	3	139.31	139.31	2.58	4.000	0.50	2.00	339	1.34	76	38	45	1.08	1.54	1270
CB-2.25	BF-10a	13	F.6-G.4	L1-L2	1909	1	231 5/16	11/16	208 13/16	t	8	8	0.2500	1.50	7/8	3.00	2	16.38	0.38	3 4/16	3	176.58	160.96	2.65	3.000	0.75	2.25	327	1.31	86	38	45	1.05	1.52	1584
CB-2.00	BF-11b	13	K-L	L2-RF	1908	1	236 1/16	11/16	213 9/16	t	8	8	0.2500	1.50	7/8	3.00	2 4/16	17.00	0.38	2 10/16	3	180.06	180.06	2.62	4.000	0.50	2.00	275	1.29	76	38	45	1.05	1.50	1577
CB-1.70	BF-12a	N	11-13	L1-L2	1901	1	233 6/16	11/16	210 14/16	t	8	8	0.2500	1.50	7/8	3.00	2	10.38	0.25	3 4/16	2	190.62	176.05	2.47	3.400	0.50	1.70	232	1.42	70	41	45	1.05	1.50	1543
CB-1.70	BF-12b	N	11-13	L1-L2	1901	1	233 6/16	11/16	210 14/16	t	8	8	0.2500	1.50	7/8	3.00	2	10.38	0.25	3 4/16	2	190.62	176.05	2.47	3.400	0.50	1.70	232	1.42	70	41	45	1.05	1.50	1543
						24																													1,584 lb

Table of Symbols

- L_b = Length of CB end to end of core
- d_h = Diameter of hole for erection bolt
- L_c = Length of casing (in)
- Type = t = tube (HSS), and p = pipe
- W_c = Width of CB casing
- H_c = Height of CB casing
- t_c = Thickness of CB casing
- n_s = Dimension factor for core stiffener length
- e = Typical erection bolt edge distance
- c = Clear distance between gusset & casing
- W_s = Width of core stiffener
- L_{st} = Length of core stiffener extension into casing
- t_s = Thickness of core stiffener
- L_e = Length of core beyond core stiffener
- D_{ws} = Size of weld for core stiffener to core
- L_{ysc} = Yield length of core w/out allowance for cntr stiffener
- W_{so} = Location of core stiffener from edge of core
- W_{sc} = Width of yielding core section
- L_{ysc} = Length of yielding core w/out allowance for Cntr Stiffener
- L'_{ysc} = Yield length of core - Yielding Portion Only
- t_{sc} = Thickness of core
- A_{sc} = Cross sectional area of yielding core section
- K_{eff} = Effective Stiffness of BRB from WP to WP
- K_f = Axial Stiffness Adjustment Factor
- P_{ysc} = Yield force of CB
- F_{ysc} = Specified yield stress range of core plate

COREBRACE WELDED BRB PROPERTIES SCHEDULE (11)

SCALE:NTS

NOTES:
1. BRB CORE PL SHALL BE ASTM A36 MATERIAL SELECTED TO PROVIDE A YEILD STRENGTH OF THE MATERIAL THAT FALLS WITHIN THE RANGE LISTED IN THE TABLE.
2. LUG PL SHALL BE A572 GR-50, CASINGS SHALL BE A500 GR-B OR A53 GR-B.
3. BRB SUPPLIER SHALL PROVIDE TEST REULTS FOR SIMILAR BRACE IN ACCORDANCE IWTH AISC 341-10
4. BRB SUPPLIER SHALL PROVIDE TESTED MATERIAL ADJUSTEMENT FACTOR FOR COMPRESSION STRENGTH (β) AND STRAIN HARDENING (ω). VALUES NOT TO EXCEED THOSE SHOWN IN THE TABLE.
5. STIFFNESS MODIFICATION FACTORS (Kf) ARE ACTUAL VALUES. ACTUAL VALUES TO BE WITHIN ±10% OF DESIGN VALUES. ACTUAL STIFFNESS WP-WP (Keff) CALCULATED AS : Keff = Kf*Asc*E/Lwp WHERE Lwp IS THE WP - WP LENGTH AND Asc IS THE SPECIFIED CORE ARE.
6. MINIMUM STROKE TO OCCUR AT EACH END OF BRACE IN TENSION AND COMPRESSION DIRECTIONS. CORE EXTENSION TO REMAIN STABLE OVER 2X THIS LENGHT.

CB-ID #	EOR-ID #	Line	Grids #	Lvls #	Mark #	Qty #	W_{WP} in	H_{WP} in	L_b in	L_{wp-b} in	e in	BRB to Guss Weld D_{wg} #/16"	BRB to Guss Weld D_{wsg} #/16"	L_g in	L_L in	L_e in	t_s in	W_s in	t_g in	F_{yg} ksi	t_{sc} in	d_b in
CB-2.00	BF-1c	1	A-B	L2-RF	1905	1	146 8/16	174 12/16	193 13/16	17 13/16	7/8	4	5	8	3	3 4/16	3/8	2	1/2	50	1/2	5/8
CB-2.00	BF-1d	1	A-B	L2-RF	1905	1	146 8/16	174 12/16	193 13/16	17 13/16	7/8	4	5	8	3	3 4/16	3/8	2	1/2	50	1/2	5/8
CB-2.50	BF-1a	1	A-B	L1-L2	1913	1	146 8/16	211 4/16	224 12/16	14 15/16	7/8	4	5	9	3	4 4/16	3/8	2	5/8	50	3/4	5/8
CB-2.50	BF-1b	1	A-B	L1-L2	1913	1	146 8/16	211 4/16	224 12/16	14 15/16	7/8	4	5	9	3	4 4/16	3/8	2	5/8	50	3/4	5/8
CB-2.50	BF-3c	A	3-4	L2-RF	1912	1	170 8/16	173 4/16	208 2/16	17 3/16	7/8	4	5	9	4	2 12/16	3/8	2 1/2	5/8	50	3/4	5/8
CB-2.50	BF-3d	A	3-4	L2-RF	1912	1	170 8/16	173 4/16	208 2/16	17 3/16	7/8	4	5	9	4	2 12/16	3/8	2 1/2	5/8	50	3/4	5/8
CB-2.00	BF-4c	5	D-F	L2-RF	1903	1	122 8/16	174 12/16	177 8/16	18 8/16	7/8	4	5	8	3	3 4/16	3/8	2	1/2	50	1/2	5/8
CB-2.00	BF-4d	5	D-F	L2-RF	1903	1	122 8/16	174 12/16	177 8/16	18 8/16	7/8	4	5	8	3	3 4/16	3/8	2	1/2	50	1/2	5/8
CB-2.00	BF-5b	5	H-J	L2-RF	1907	1	199	174 12/16	220 3/16	23	7/8	4	5	8	3	3 4/16	3/8	2	1/2	50	1/2	5/8
CB-2.00	BF-7g	M	6.3-7	L2-RF	1902	1	116	174 12/16	174 8/16	18 3/16	7/8	4	5	8	3	3 4/16	3/8	2	1/2	50	1/2	5/8
CB-2.00	BF-7h	M	6.3-7	L2-RF	1902	1	116	174 12/16	174 8/16	18 3/16	7/8	4	5	8	3	3 4/16	3/8	2	1/2	50	1/2	5/8
CB-2.00	BF-7e	M	5-6.3	L2-RF	1906	1	155	174 12/16	194 4/16	20 4/16	7/8	3	5	9	3 9/16	3 5/16	3/8	2 3/8	1/2	50	1/2	5/8
CB-2.00	BF-7f	M	5-6.3	L2-RF	1906	1	155	174 12/16	194 4/16	20 4/16	7/8	3	5	9	3 9/16	3 5/16	3/8	2 3/8	1/2	50	1/2	5/8
CB-2.50	BF-7c	M	6.3-7	L1-L2	1911	1	116	209 12/16	204 2/16	17 10/16	7/8	4	5	9	3	4 4/16	3/8	2	5/8	50	3/4	5/8
CB-2.50	BF-7d	M	6.3-7	L1-L2	1911	1	116	209 12/16	204 2/16	17 10/16	7/8	4	5	9	3	4 4/16	3/8	2	5/8	50	3/4	5/8
CB-2.00	BF-8c	8	B.3-C.1	L2-RF	1904	1	130 8/16	173 4/16	182	17 1/16	7/8	4	5	8	3 9/16	2 5/16	3/8	2 3/8	1/2	50	1/2	5/8
CB-2.00	BF-8d	8	B.3-C.1	L2-RF	1904	1	130 8/16	173 4/16	182	17 1/16	7/8	4	5	8	3 9/16	2 5/16	3/8	2 3/8	1/2	50	1/2	5/8
CB-2.50	BF-9c	A	10-12	L2-RF	1910	1	109 8/16	173 4/16	168 6/16	18	7/8	5	5	9	4 6/16	2 2/16	3/8	2 3/4	5/8	50	3/4	5/8
CB-2.50	BF-9d	A	10-12	L2-RF	1910	1	109 8/16	173 4/16	168 6/16	18	7/8	5	5	9	4 6/16	2 2/16	3/8	2 3/4	5/8	50	3/4	5/8
CB-2.00	BF-10b	13	F.6-G.4	L2-RF	1906	1	152	171 12/16	194 1/16	16 4/16	7/8	4	5	8	3	3 4/16	3/8	2	1/2	50	1/2	5/8
CB-2.25	BF-10a	13	F.6-G.4	L1-L2	1909	1	152	212 12/16	231 5/16	14 10/16	7/8	4	5	8	3	3 4/16	3/8	2	5/8	50	3/4	5/8
CB-2.00	BF-11b	13	K-L	L2-RF	1908	1	209	174 4/16	236 1/16	19 1/16	7/8	3	5	8	3 6/16	2 10/16	3/8	2 1/4	1/2	50	1/2	5/8
CB-1.70	BF-12a	N	11-13	L1-L2	1901	1	165	209 12/16	233 6/16	13 9/16	7/8	3	4	8	3	3 4/16	1/4	2	1/2	50	1/2	5/8
CB-1.70	BF-12b	N	11-13	L1-L2	1901	1	165	209 12/16	233 6/16	13 9/16	7/8	3	4	8	3	3 4/16	1/4	2	1/2	50	1/2	5/8

EOR-ID	Bottom Bm/Col Flange Bot W_b in	L_{wb} in	W_c in	L_{wc} in	L_{gb} in	L_{gc} in	Bottom V Bot W_b in	L_{wb} in	L_{gb} in	L_{gc} in	Top Bm/Col Flange Top W_b in	L_{wb} in	W_c in	L_{wc} in	L_{gb} in	L_{gc} in	Top Chev Λ W_b in	L_{wb} in	L_{gb} in	L_{gc} in	Required Stiff or CP BM Bot	Col Bot	BM Top	Col Top	CB Wt lb	Total Wt lb
BF-1c	-	-	-	-	-	-	3/16	19	20	12	1/4	11	3/16	10	13	12	-	-	-	-	**	-	-	-	1268	1268
BF-1d	-	-	-	-	-	-	3/16	19	20	12	1/4	11	3/16	10	13	12	-	-	-	-	**	-	-	-	1268	1268
BF-1a	1/4	10	1/4	19	12	21	-	-	-	-	-	-	-	-	-	-	1/4	17	18	13	-	-	**	-	1518	1518
BF-1b	1/4	10	1/4	19	12	21	-	-	-	-	-	-	-	-	-	-	1/4	17	18	13	-	-	**	-	1518	1518
BF-3c	-	-	-	-	-	-	1/4	21	22	13	1/4	15	1/4	11	17	13	-	-	-	-	**	-	-	-	1401	1401
BF-3d	-	-	-	-	-	-	1/4	21	22	13	1/4	15	1/4	11	17	13	-	-	-	-	**	-	-	-	1401	1401
BF-4c	-	-	-	-	-	-	1/4	17	18	12	1/4	11	3/16	10	13	12	-	-	-	-	**	-	-	-	1151	1151
BF-4d	-	-	-	-	-	-	1/4	17	18	12	1/4	11	3/16	10	13	12	-	-	-	-	**	-	-	-	1151	1151
BF-5b	3/16	19	3/16	9	21	11	-	-	-	-	3/16	18	3/16	9	20	11	-	-	-	-	-	-	-	-	1458	1458
BF-7g	-	-	-	-	-	-	1/4	17	18	12	1/4	10	3/16	10	12	12	-	-	-	-	**	-	-	-	1129	1129
BF-7h	-	-	-	-	-	-	1/4	17	18	12	1/4	10	3/16	10	12	12	-	-	-	-	**	-	-	-	1129	1129
BF-7e	-	-	-	-	-	-	3/16	22	23	13	3/16	15	3/16	11	17	13	-	-	-	-	**	-	-	-	1264	1264
BF-7f	-	-	-	-	-	-	3/16	22	23	13	3/16	15	3/16	11	17	13	-	-	-	-	**	-	-	-	1264	1264
BF-7c	1/4	9	1/4	22	11	24	-	-	-	-	-	-	-	-	-	-	5/16	15	16	13	-	-	**	-	1366	1366
BF-7d	1/4	9	1/4	22	11	24	-	-	-	-	-	-	-	-	-	-	5/16	15	16	13	-	-	**	-	1366	1366
BF-8c	-	-	-	-	-	-	1/4	17	18	12	1/4	12	3/16	10	14	12	-	-	-	-	**	-	-	-	1189	1189
BF-8d	-	-	-	-	-	-	1/4	17	18	12	1/4	12	3/16	10	14	12	-	-	-	-	**	-	-	-	1189	1189
BF-9c	-	-	-	-	-	-	1/4	17	18	14	5/16	12	1/4	12	14	14	-	-	-	-	**	-	-	-	1111	1111
BF-9d	-	-	-	-	-	-	1/4	17	18	14	5/16	12	1/4	12	14	14	-	-	-	-	**	-	-	-	1111	1111
BF-10b	1/4	12	3/16	10	14	12	-	-	-	-	1/4	14	3/16	10	16	12	-	-	-	-	-	-	-	-	1270	1270
BF-10a	1/4	9	1/4	18	11	20	-	-	-	-	1/4	10	1/4	10	12	12	-	-	-	-	-	-	-	-	1584	1584
BF-11b	3/16	16	3/16	10	18	12	-	-	-	-	3/16	15	3/16	10	17	12	-	-	-	-	-	-	0.50"	-	1577	1577
BF-12a	3/16	9	3/16	16	11	18	-	-	-	-	-	-	-	-	-	-	3/16	19	20	12	-	-	**	-	1543	1543
BF-12b	3/16	9	3/16	16	11	18	-	-	-	-	-	-	-	-	-	-	3/16	19	20	12	-	-	**	-	1543	1543

Note: May Dbl Count Stiffeners. Indicated Thickness Each Side of Column. Weld Stiffener to FL and Web with 5/16" fillet welds for stiffener t ≤ 1.25", 7/16" for t ≤ 2.0"
CP = Cont Plate & Guss Stiff PL
*** = Stiffener PL Req'd Per Detail (Chev or V Location)*

31,771 lb
15.9 Ton

Table of Symbols

- W_{WP} = Width of frame bay workpoint (WP) to WP
- H_{WP} = Height of frame bay WP to WP
- L_b = Length of CB end to end of core
- L_{wp-b} = Length from WP to bottom end only of CB
- e = Typical erection bolt edge distance
- D_{wg} = Size of weld for core to gusset
- D_{wsg} = Size of weld for core stiffeners to gusset
- L_g = Length of core lap on gusset
- L_L = Length of stiffener lap on gusset
- L_e = Length of core beyond core stiffener
- t_s = Thickness of core stiffener
- W_s = Width of core stiffener
- t_g = Thickness of gusset
- $F_{y,g\&r}$ = Gusset A572 grade
- t_{sc} = Thickness of core
- W_b = Minimum size of beam weld
- L_{wb} = Minimum length of beam weld
- W_c = Minimum size of column weld
- L_{wc} = Minimum length of column weld
- L_{gb} = Approximate maximum width of gusset rounded up to nearest inch (At V or Chev, equal to 1/2 gusset width)
- L_{gc} = Approximate maximum height of gusset rounded up to nearest inch

COREBRACE GUSSET CONNECTION SCHEDULE - WELDED BRACES (10)

SCALE:NTS

NOTES:
1. ALL GUSSET AND REPAD PL SHALL BE A572 GR-50 U.N.O.
2. ALL STIFFENERS TO MATCH BEAM AND COLUMN GRADE.
3. GUSSET PLATE SIZES SHOWN IN TABLE ARE MINIMUMS, SEE ANCHOR BOLT AND BEAM CONNECTION DETAILS FOR ADDITIONAL SIZE REQUIREMENTS.
4. FINAL GUSSET AND WELD SIZES TO BE COORDINATED WITH COREBRACE.

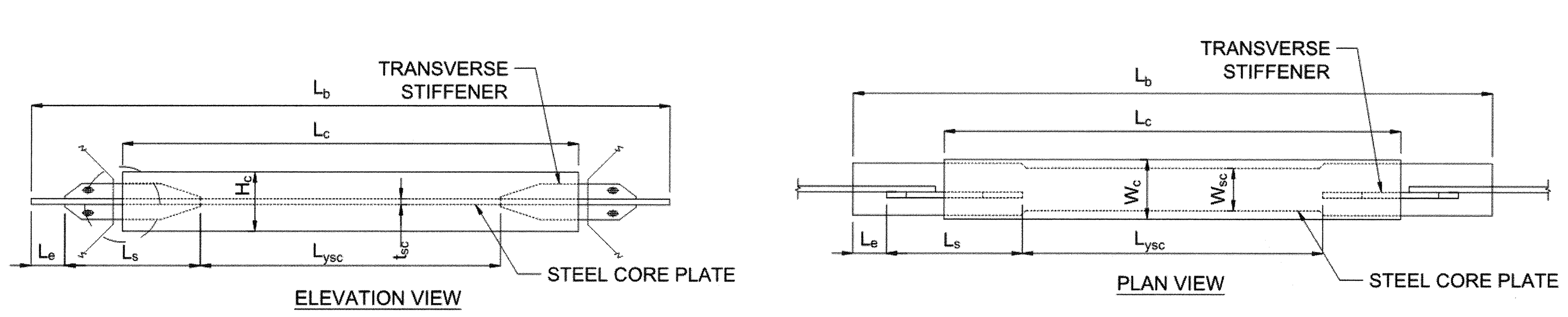

FLAT CORE PLATE DETAIL (7)

SCALE:NTS

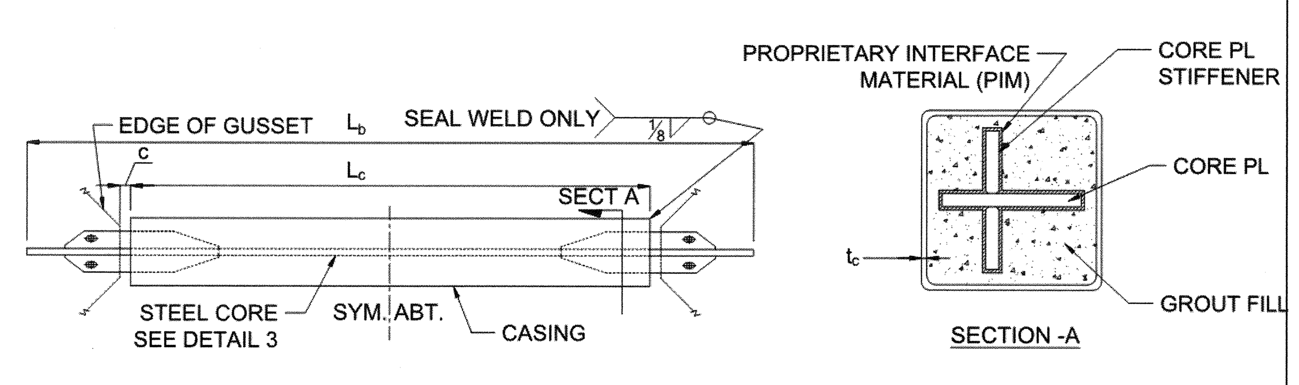

BUCKLING RESTRAINED BRACE DETAIL (9)

SCALE:NTS

HPI architecture
www.hpiarchitecture.com
115 22nd street
Newport Beach, CA 92663
o: 949. 675. 6442

CONSULTANTS
MHP
STRUCTURAL ENGINEERS
3900 Cover Street
Long Beach, CA 90808
562.985.3200 P
562.985.1011 F
MHP JN 14-0451-00

REGISTERED PROFESSIONAL ENGINEER TERRY FERNANDEZ No. 3256 EXP. 03-31-19 STRUCTURAL STATE OF CALIFORNIA 8.21.18

SEALS / APPROVALS

LICENSED ARCHITECT LAWRENCE ... NO. C 11360 Ren. 6-30-19 STATE OF CALIFORNIA

IDENTIFICATION STAMP
DIV. OF THE STATE ARCHITECT
FILE: 30-C2
A# 04-116810
AC — FLS — SS TY
DATE AUG 3 1 2018

PROJECT TITLE

JOHNSON STUDENT CENTER

INCREMENT 2

1530 W 17TH ST SANTA ANA CA 92706

RANCHO SANTIAGO Community College District

SUBMITTALS		
#	DATE	DESCRIPTION
	08/13/2018	DSA FINAL SUBMITTAL

PROJECT IDENTIFICATION Project Number

THESE DRAWINGS ORIGINALLY CREATED IN AUTODESK REVIT V. 2016 U.O.N.

THE ORIGINAL SIZE OF THIS SHEET IS 30" X 42".

DRAWN BY JA / SMA / AM

CHECKED BY DCF

THESE DRAWINGS AND SPECIFICATIONS ARE THE PROPERTY AND COPYRIGHT OF THE ARCHITECT AND SHALL NOT BE USED ON ANY OTHER PROJECT OR LOCATIONS EXCEPT AS DESCRIBED ON THE DRAWINGS, WITHOUT WRITTEN AGREEMENT WITH THE ARCHITECT.

© HILL PARTNERSHIP INC. 2017

SHEET TITLE

COREBRACE SECTIONS AND DETAILS

SHEET NUMBER

S5.20B

DSA FINAL SUBMITTAL

8/24/2018 2:56:14 PM C:\Users\jmarin\Documents\14-0451-00_SA College Johnson Center_R16_Struc_jmarfin.rvt

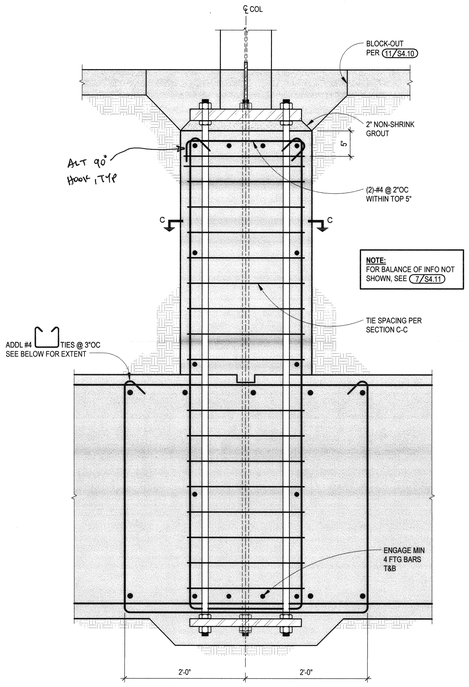

SECTION B-B

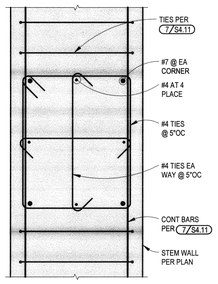

SECTION C-C AT BRBF COLUMN

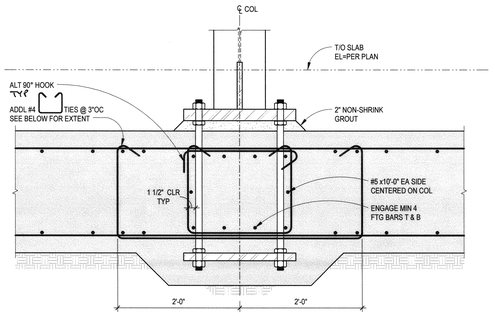

SECTION B-B

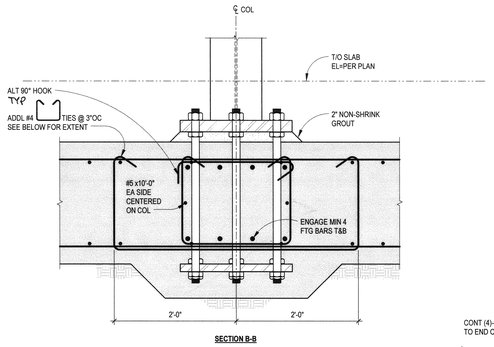

SECTION B-B

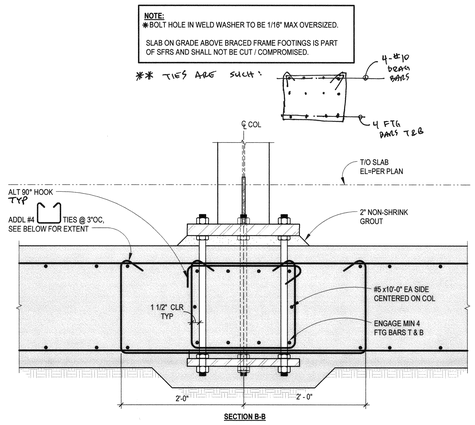

SECTION B-B

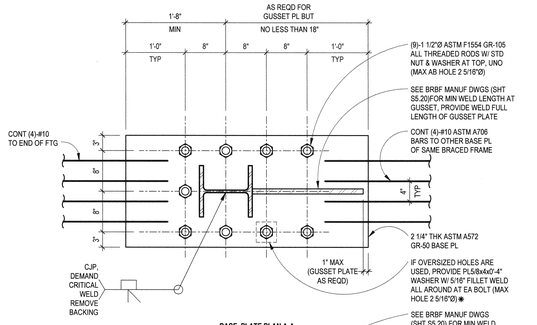

BASE PLATE PLAN A-A

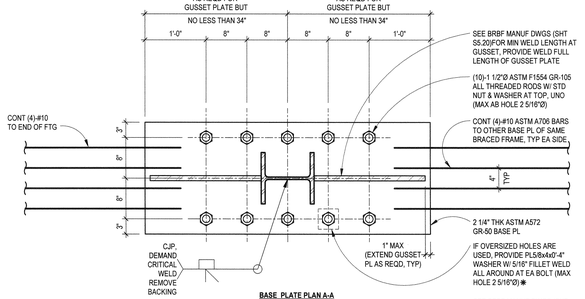

BASE PLATE PLAN A-A

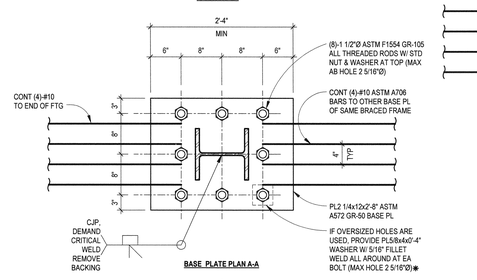

BASE PLATE PLAN A-A

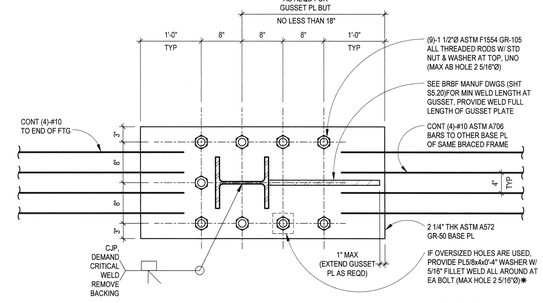

BASE PLATE PLAN A-A

NOTE: FOR INFO NOT SHOWN SEE BRBF MANUFACTURER DRAWINGS SHEET S5.20

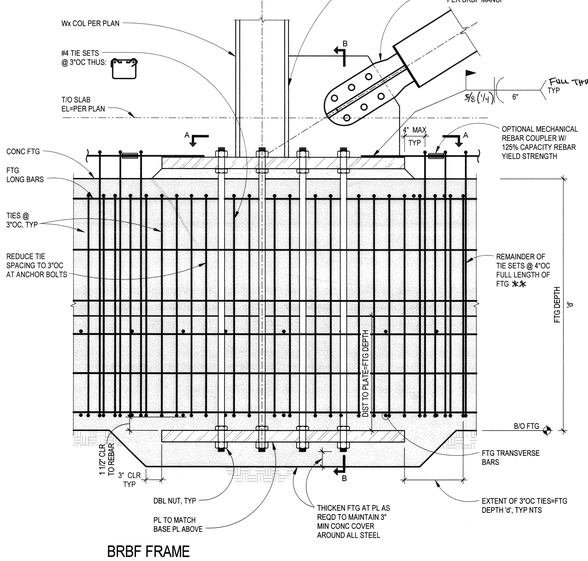

BRBF FRAME
COLUMN WITH BRACE AT LOWERED FOOTING
SCALE: 1" = 1'-0"
4 S5.21

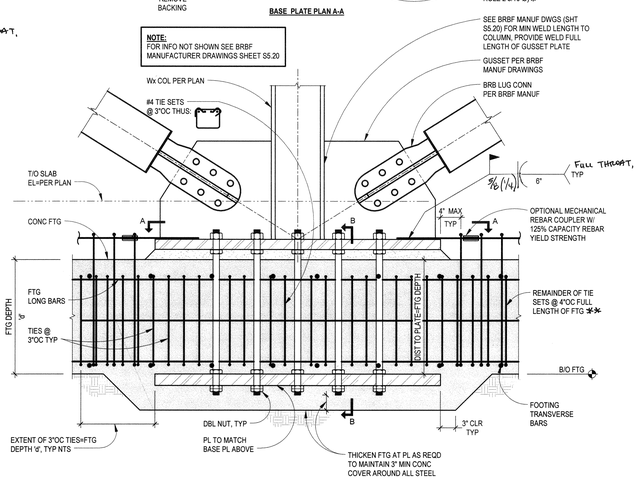

TYPICAL BRBF PLATE DETAIL
SCALE: 1" = 1'-0"
3 S5.21

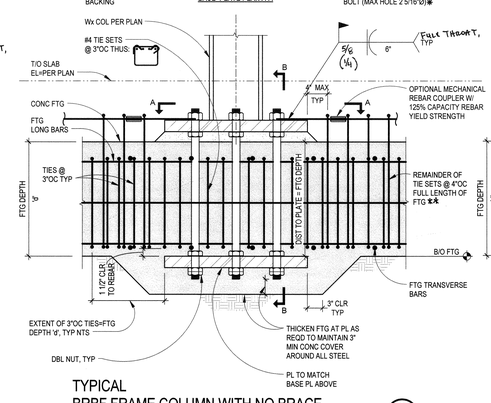

TYPICAL
BRBF FRAME COLUMN WITH NO BRACE
SCALE: 1" = 1'-0"
2 S5.21

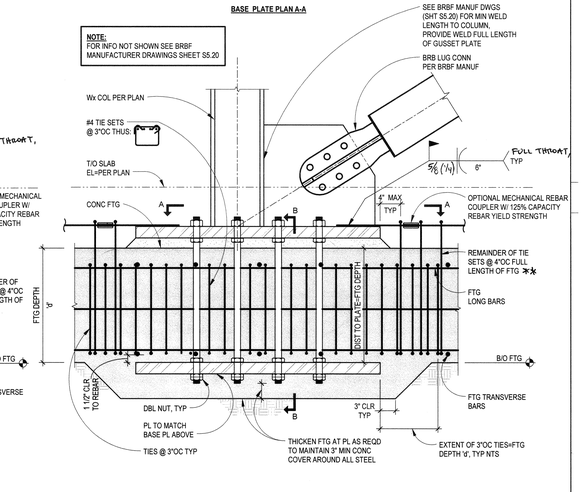

TYPICAL BRBF PLATE DETAIL
SCALE: 1" = 1'-0"
1 S5.21

NOTE: FOR INFO NOT SHOWN SEE BRBF MANUFACTURER DRAWINGS SHEET S5.20

HPI architecture
www.hpiarchitecture.com
115 22nd street
Newport Beach, CA 92663
o: 949. 675. 6442

CONSULTANTS
MHP STRUCTURAL ENGINEERS
3900 Cover Street
Long Beach, CA 90808
562.985.3200 P
562.985.1011 F
MHP JN 14-0451-00

SEALS / APPROVALS

IDENTIFICATION STAMP
DIV. OF THE STATE ARCHITECT
FILE: 30-C2
A# 04-116810
AC — FLS — SS TY
DATE AUG 31 2018

PROJECT TITLE
JOHNSON STUDENT CENTER
INCREMENT 2
1530 W 17TH ST SANTA ANA, CA 92706

RANCHO SANTIAGO Community College District

SUBMITTALS

#	DATE	DESCRIPTION
	08/13/2018	DSA FINAL SUBMITTAL

PROJECT IDENTIFICATION Project Number

THESE DRAWINGS ORIGINALLY CREATED IN AUTODESK REVIT V. 2016 U.O.N.

THE ORIGINAL SIZE OF THIS SHEET IS 30" X 42".

DRAWN BY JA / SMA / AM

CHECKED BY DCF

THESE DRAWINGS AND SPECIFICATIONS ARE THE PROPERTY AND COPYRIGHT OF THE ARCHITECT AND SHALL NOT BE USED ON ANY OTHER PROJECT OR LOCATIONS EXCEPT AS DESCRIBED ON THE DRAWINGS, WITHOUT WRITTEN AGREEMENT WITH THE ARCHITECT.

© HILL PARTNERSHIP INC. 2017

SHEET TITLE
BRACED FRAME SECTIONS AND DETAILS

SHEET NUMBER
S5.21

DSA FINAL SUBMITTAL

8/16/2018 6:43:44 PM D:\Revit Local Files\14-0451-00_SA College Johnson Center_R16_Struc_jacobgarvit

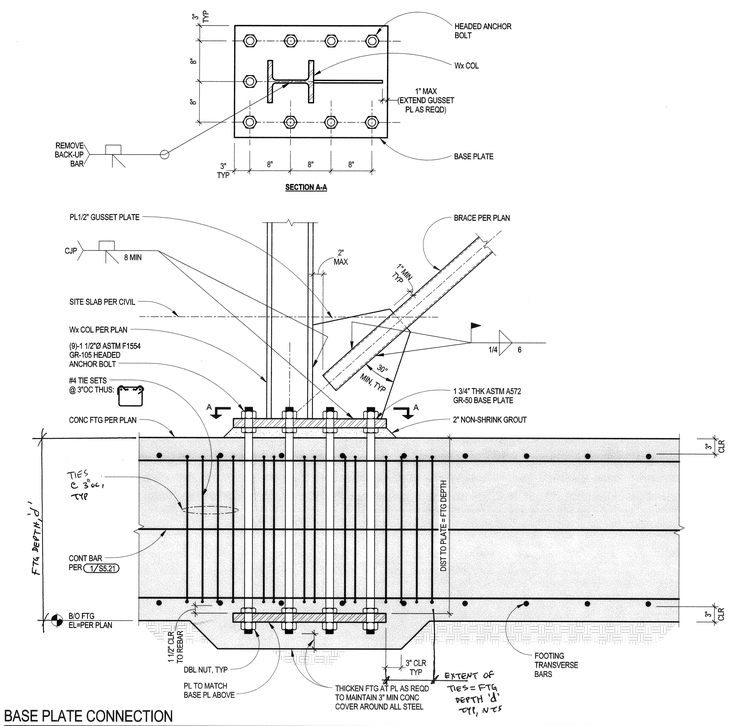

BASE PLATE CONNECTION

SCALE: 1" = 1'-0"

1 / S5.22

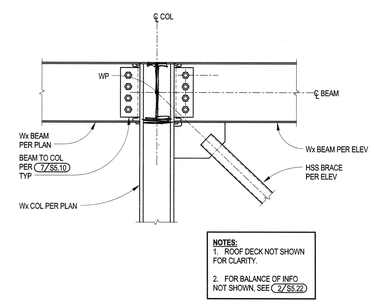

GUSSET PLATE CONNECTION

SCALE: 3/4" = 1'-0"

4 / S5.22

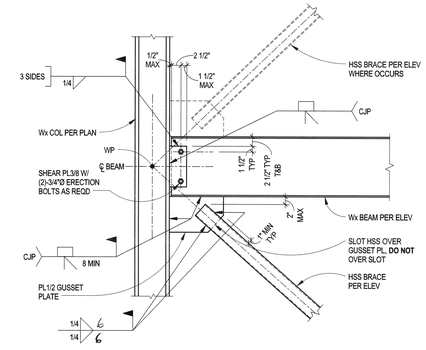

GUSSET PLATE CONNECTION

SCALE: 3/4" = 1'-0"

2 / S5.22

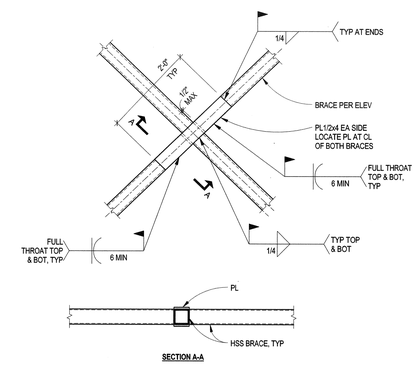

BRACE INTERSECTION DETAIL

SCALE: 3/4" = 1'-0"

3 / S5.22

HPI architecture
www.hpiarchitecture.com
115 22nd street
Newport Beach, CA 92663
o: 949. 675. 6442

CONSULTANTS

MHP STRUCTURAL ENGINEERS
3900 Cover Street
Long Beach, CA 90808
562.985.3200 P
562.985.1011 F
MHP JN 14-0451-00

REGISTERED PROFESSIONAL ENGINEER — STRUCTURAL — STATE OF CALIFORNIA

AUG 10 2018

SEALS / APPROVALS

LICENSED ARCHITECT — STATE OF CALIFORNIA

IDENTIFICATION STAMP
DIV. OF THE STATE ARCHITECT
FILE: 30-C2
A# 04-116810
AC — FLS — SS TY
DATE AUG 3 1 2018

PROJECT TITLE

JOHNSON STUDENT CENTER

INCREMENT 2

1530 W 17TH ST SANTA ANA CA 92706

RANCHO SANTIAGO Community College District

SUBMITTALS

#	DATE	DESCRIPTION
	08/13/2018	DSA FINAL SUBMITTAL

PROJECT IDENTIFICATION Project Number

THESE DRAWINGS ORIGINALLY CREATED IN AUTODESK REVIT v. 2016 U.O.N.

THE ORIGINAL SIZE OF THIS SHEET IS 30" X 42".

DRAWN BY JA / SMA / AM

CHECKED BY DCF

THESE DRAWINGS AND SPECIFICATIONS ARE THE PROPERTY AND COPYRIGHT OF THE ARCHITECT AND SHALL NOT BE USED ON ANY OTHER PROJECT OR LOCATIONS EXCEPT AS DESCRIBED ON THE DRAWINGS, WITHOUT WRITTEN AGREEMENT WITH THE ARCHITECT.

© HILL PARTNERSHIP INC. 2017

SHEET TITLE

BRACED FRAME SECTIONS AND DETAILS

SHEET NUMBER

S5.22

DSA FINAL SUBMITTAL

D:\Revit Local Files\14-0451-00_SA College Johnson Center_R16_Struc_jarciaga.rvt   8/16/2018 6:43:47 PM

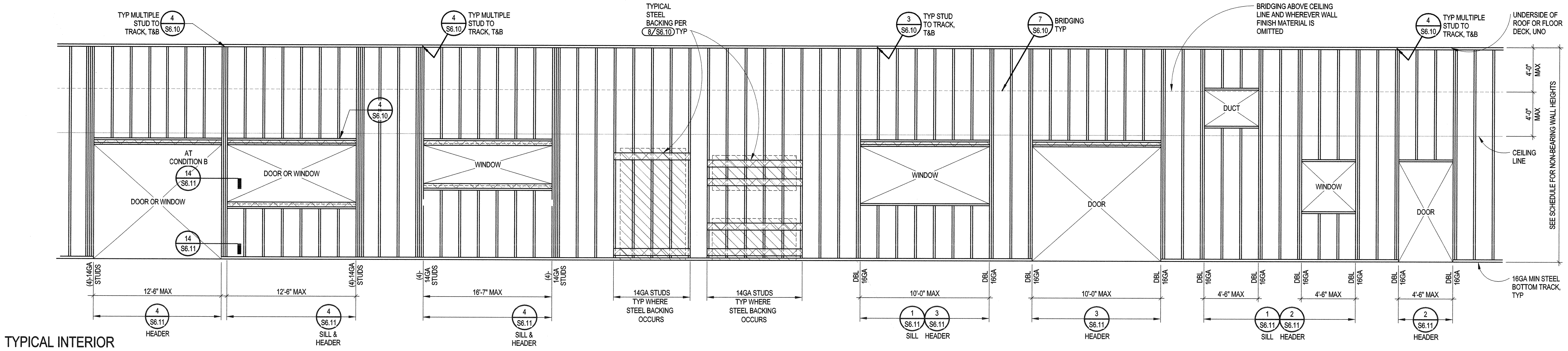

TYPICAL INTERIOR STEEL STUD WALL FRAMING ELEVATION

SCALE: 1/4" = 1'-0"

A / S6.10

INTERIOR STEEL STUD FRAMING ELEVATION NOTES:

1. SEE NON-BEARING INTERIOR STEEL STUD SCHEDULE ON THIS SHEET FOR MINIMUM REQUIRED STUD DEPTH AND SPACING OF ALL INTERIOR NON-BEARING STEEL STUD WALLS. MATCH STUD DEPTH SHOWN ON ARCHITECTURAL DRAWINGS.
2. ALL STEEL STUDS SHALL BE "C" TYPE STUDS WITH FLANGE STIFFENERS AT OPEN SIDE.
3. WHERE FURRING STUDS OCCUR, SPACING SHALL MATCH FRAMING STUD SPACING, TERMINATE FURRING STUDS WITH SINGLE STUDS AND TRACKS AROUND OPENINGS.
4. [hatched box] DENOTES CASEWORK, SHELVING, TOILET ACCESSORIES, GRAB BARS, WALL HUNG LAVATORIES, CABLE TRAYS, EQUIPMENT, ETC., INCLUDING ITEMS INDICATED AS NOT IN CONTRACT (NIC), AND WHERE SPECIFICALLY REFERENCED.
5. IN NO CASE SHALL STUDS (SINGLE OR MULTIPLE) AT SIDES OF OPENINGS (JAMBS) BE CUT FOR DUCTWORK OR FOR ANY OTHER PURPOSE NOT SPECIFICALLY ADDRESSED ON THESE STRUCTURAL DRAWINGS.
6. UNLESS NOTED OTHERWISE, 14GA STEEL STUDS @ 16"OC MINIMUM SHALL BE USED AT ALL LOCATIONS WHERE STEEL BACKING OCCURS AND WHERE SHOWN ON FRAMING ELEVATION.
7. BRACED STUD WALLS MAY OCCUR AT NON-RATED PARTITIONS. FULL HEIGHT STUD WALLS REQUIRED AT ALL OTHER LOCATIONS.
8. SEE TYPICAL STEEL BOTTOM TRACK ANCHORAGE AT INTERIOR STEEL STUDS DETAIL FOR TRACK ANCHORAGE AT ALL INTERIOR STEEL STUDS, UNLESS NOTED OTHERWISE. SEE (1/S6.10)
9. SEE GENERAL NOTES SHEET(S) FOR STEEL STUD NOTES, INCLUDING SSMA STEEL STUD IDENTIFICATION TABLE. SEE ARCHITECTURAL DRAWINGS FOR ADDITIONAL STUD AND BRACING REQUIREMENTS.
10. SEE TYPICAL STEEL STUD SECTIONS AND DETAILS SHEETS FOR ADDITIONAL STEEL STUD DETAILS.
11. UNLESS NOTED OTHERWISE, ALL STEEL STUD WALLS SHALL BE FULLY SHEATHED ON BOTH SIDES OF WALL (SHEATHING NOT SHOWN IN DETAILS FOR CLARITY).

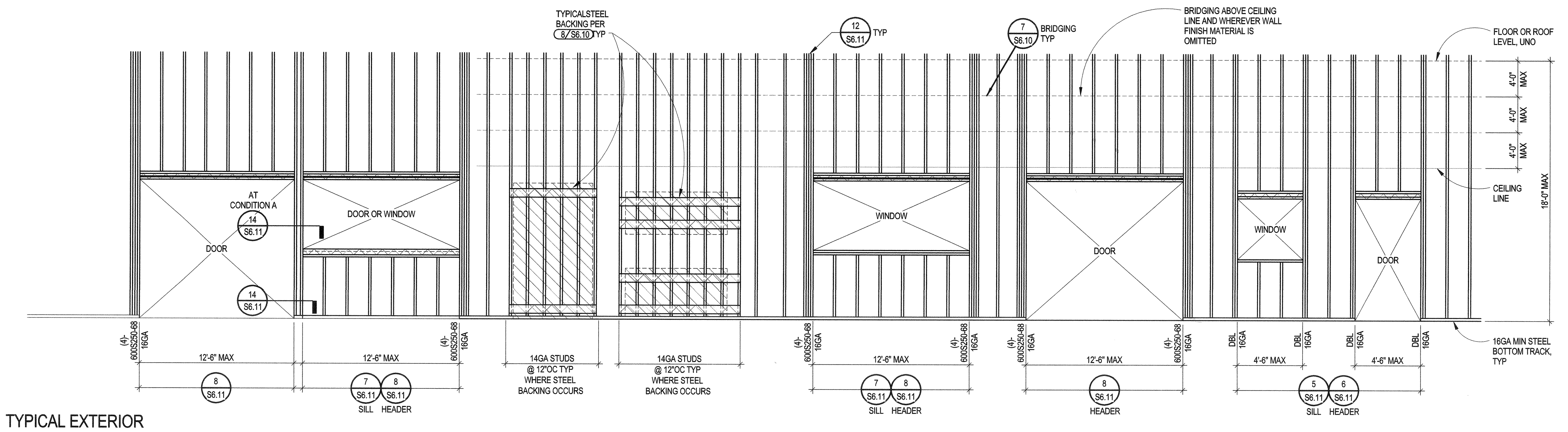

TYPICAL EXTERIOR STEEL STUD WALL FRAMING ELEVATION

SCALE: 1/4" = 1'-0"

C / S6.10

EXTERIOR STEEL STUD FRAMING ELEVATION NOTES:

1. UNLESS NOTED OTHERWISE, EXTERIOR WALL STEEL STUDS SHALL BE 600S162-68(MIN) @ 16"OC W/ 600T150-43 STEEL TRACKS.
2. ALL STEEL STUDS SHALL BE "C" TYPE STUDS WITH FLANGE STIFFENERS AT OPEN SIDE.
3. WHERE FURRING STUDS OCCUR, SPACING SHALL MATCH FRAMING STUD SPACING, TERMINATE FURRING STUDS WITH SINGLE STUDS AND TRACKS AROUND OPENINGS.
4. [hatched box] DENOTES CASEWORK, SHELVING, TOILET ACCESSORIES, GRAB BARS, WALL HUNG LAVATORIES, CABLE TRAYS, EQUIPMENT, ETC., INCLUDING ITEMS INDICATED AS NOT IN CONTRACT (NIC), AND WHERE SPECIFICALLY REFERENCED.
5. IN NO CASE SHALL STUDS (SINGLE OR MULTIPLE) AT SIDES OF OPENINGS (JAMBS) BE CUT FOR DUCTWORK OR FOR ANY OTHER PURPOSE NOT SPECIFICALLY ADDRESSED ON THESE STRUCTURAL DRAWINGS.
6. UNLESS NOTED OTHERWISE, 14GA STEEL STUDS @ 12"OC MINIMUM SHALL BE USED AT ALL LOCATIONS WHERE STEEL BACKING OCCURS AND WHERE SHOWN ON FRAMING ELEVATION.
8. SEE TYPICAL BOTTOM TRACK ANCHORAGE AT CURB AND EXTERIOR STEEL STUDS DETAIL FOR TRACK ANCHORAGE AT ALL EXTERIOR STEEL STUDS, UNLESS NOTED OTHERWISE. SEE (2/S6.10)
9. SEE GENERAL NOTES SHEET(S) FOR STEEL STUD NOTES, INCLUDING SSMA STEEL STUD IDENTIFICATION TABLE. SEE ARCHITECTURAL DRAWINGS FOR ADDITIONAL STUD AND BRACING REQUIREMENTS.
10. SEE TYPICAL STEEL STUD SECTIONS AND DETAILS SHEETS FOR ADDITIONAL STEEL STUD DETAILS.

TYPICAL NON-BEARING INTERIOR STUDS - VERTICAL SPAN SCHEDULE SHEATHED BOTH SIDES

HEIGHT OF WALL (VERTICAL SPAN)	MIN STUD SIZE REQUIRED FOR SCHEDULED SPACING (L/360 DEFLECTION CRITERIA) (5 PSF)		
	12"OC	16"OC	24"OC
8 FT	362S162-33	362S162-33	---
10 FT	362S162-33	362S162-33	362S162-33
12 FT	362S162-33	362S162-33	362S162-33
14 FT	362S162-33	362S162-33	362S162-43
16 FT	362S162-33	362S162-43	400S200-43
18 FT	362S162-43	400S200-43	600S162-33
20 FT	400S200-43	600S162-33	600S162-43
22 FT	600S162-33	600S162-33	600S200-43
24 FT	600S162-33	600S200-43	600S200-54
26 FT	600S162-43	600S200-43	600S200-68
28 FT	600S200-43	600S200-68	800S200-43
32 FT	600S200-68	800S200-43	800S162-68
36 FT	800S162-54	800S162-68	---
40 FT	800S162-68	---	---

NOTES:
1. THIS SCHEDULE IS FOR WALLS NOT USED TO SUPPORT CABINETRY. FRAMING ELEVATION PROVIDES ADDITIONAL REQUIREMENTS.
2. SEE ADDITIONAL INFORMATION ON BUILDING PLANS FOR SPECIFIC REQUIREMENTS.
3. ALTERNATE STUD SIZES MAY BE USED IF THE SECTION PROPERTIES OF THE STUDS USED EXCEED, IN ALL CASES, THE PROPERTIES OF THE SIZES NOTED IN THE SCHEDULE.

NON-BEARING INTERIOR STEEL STUD SCHEDULE

SCALE: 1/4" = 1'-0"

B / S6.10

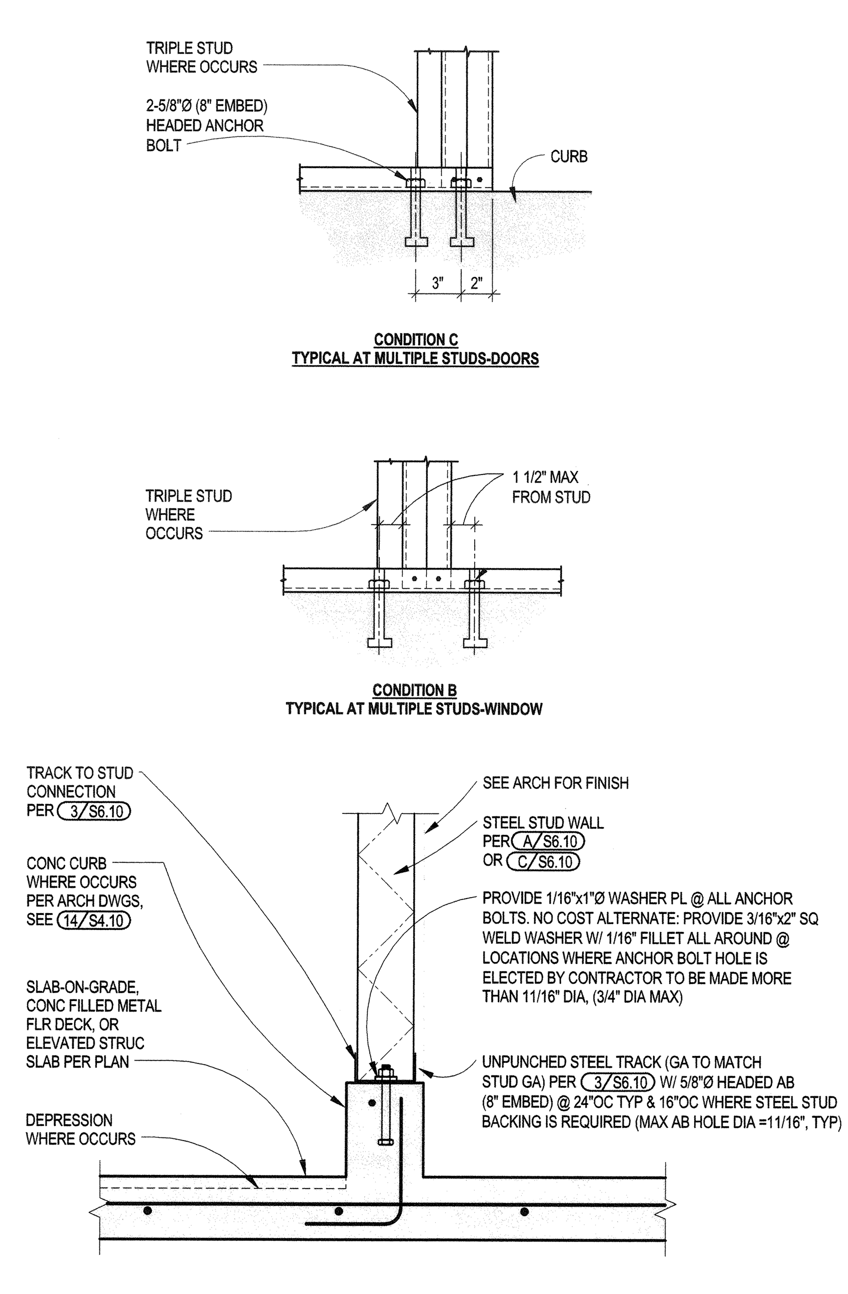

NON-BEARING STEEL STUD WALL AT CURB

SCALE: 1 1/2" = 1'-0"

9 / S6.10

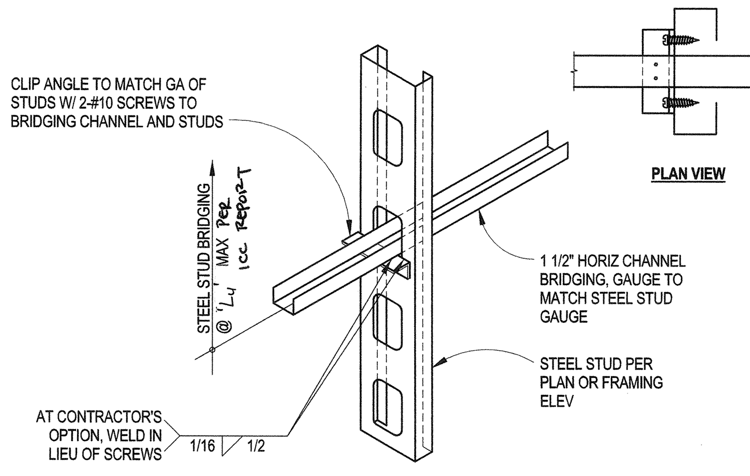

NOTE:
UNLESS NOTED OTHERWISE ON PLAN, STEEL STUD BRIDGING SHALL BE INSTALLED WHERE SHEATHING DOES NOT OCCUR ON BOTH SIDES OF THE WALL FOR FULL HEIGHT OF STUD. WHERE SHEATHING OR FINISH IS DISCONTINUED, BRIDGING IS REQUIRED.

TYPICAL STEEL STUD BRIDGING

SCALE: 1" = 1'-0"

7 / S6.10

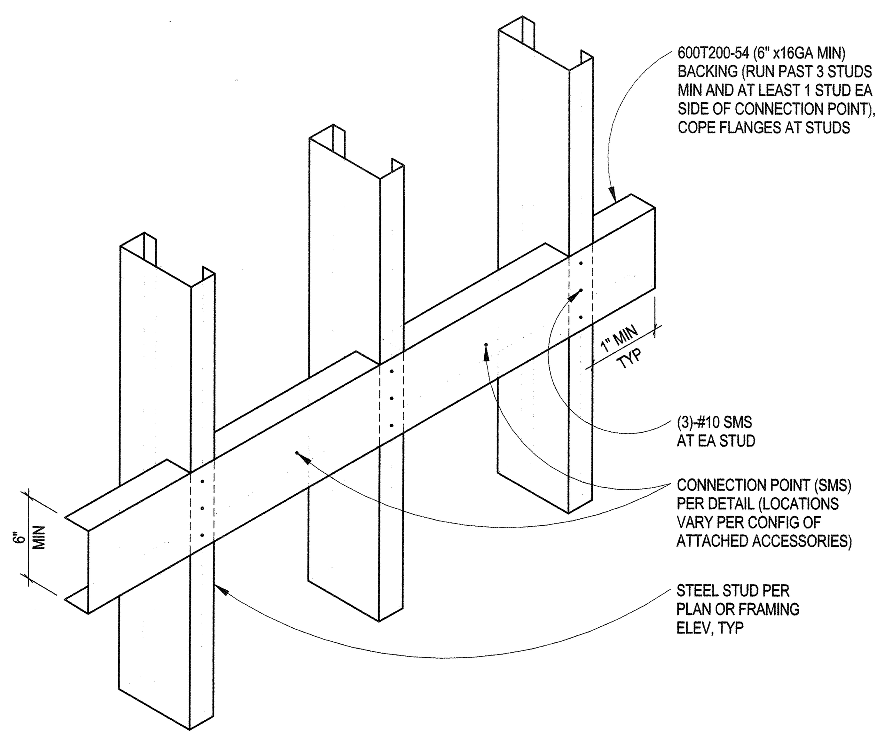

TYPICAL STEEL TRACK BACKING

SCALE: 1 1/2" = 1'-0"

8 / S6.10

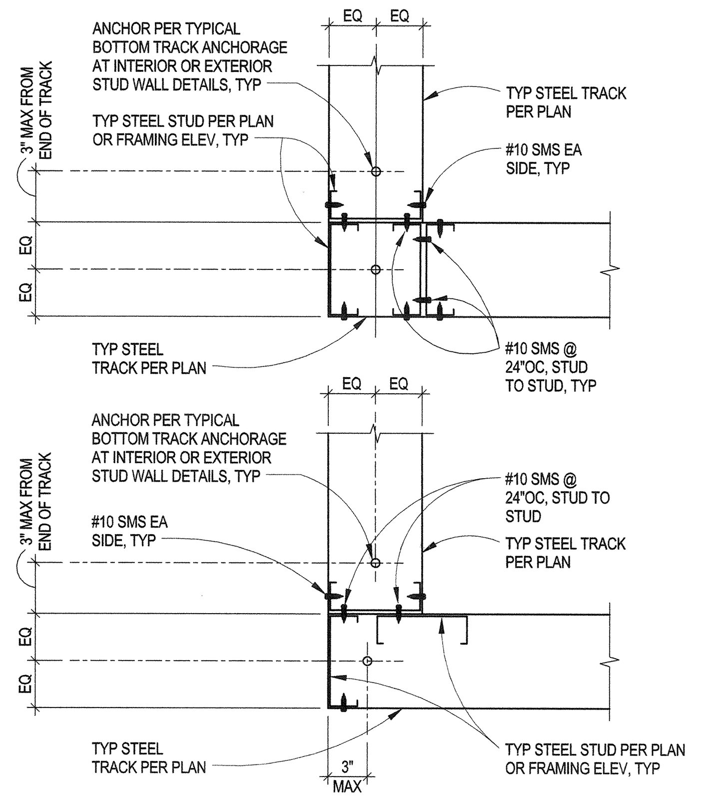

TYPICAL STEEL STUDS AT CORNER

SCALE: 1 1/2" = 1'-0"

5 / S6.10

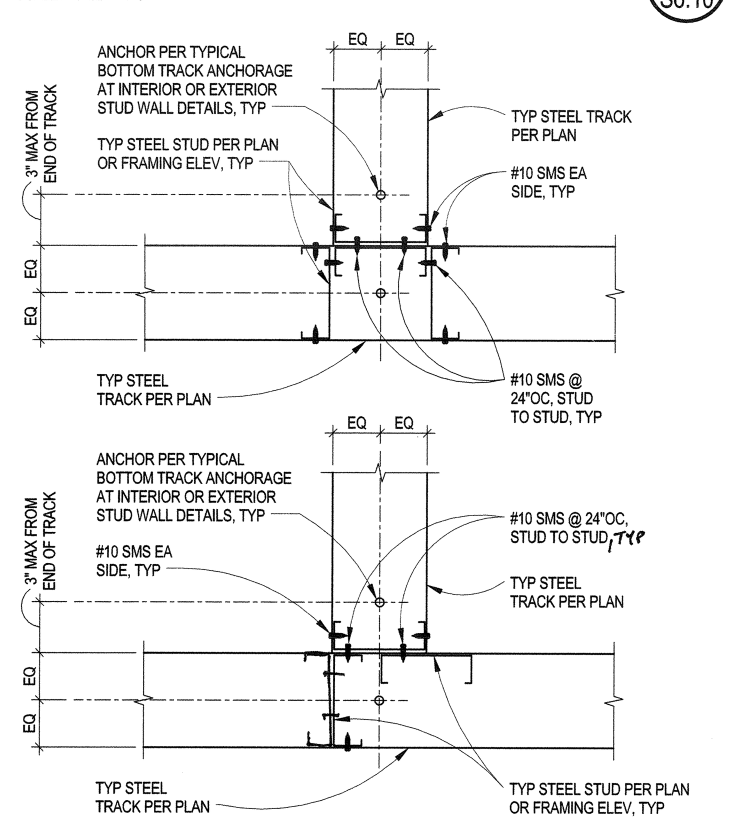

TYPICAL STEEL STUDS AT INTERSECTION

SCALE: 1 1/2" = 1'-0"

6 / S6.10

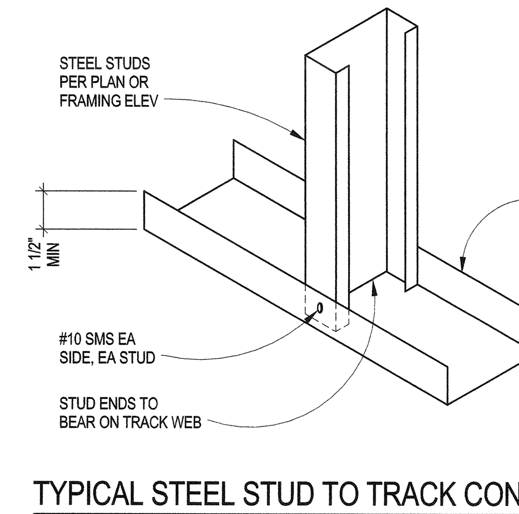

NOTE:
STUD TO TRACK CONNECTION SCREWS ALTHOUGH REQUIRED, MAY NOT BE SHOWN ON OTHER DETAILS FOR CLARITY.

TYPICAL STEEL STUD TO TRACK CONNECTION

SCALE: 1 1/2" = 1'-0"

3 / S6.10

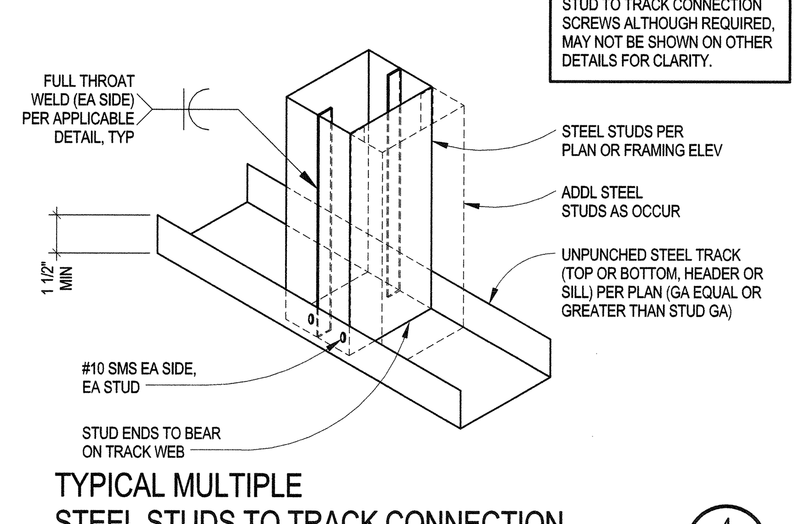

NOTE:
STUD TO TRACK CONNECTION SCREWS ALTHOUGH REQUIRED, MAY NOT BE SHOWN ON OTHER DETAILS FOR CLARITY.

TYPICAL MULTIPLE STEEL STUDS TO TRACK CONNECTION

SCALE: 1 1/2" = 1'-0"

4 / S6.10

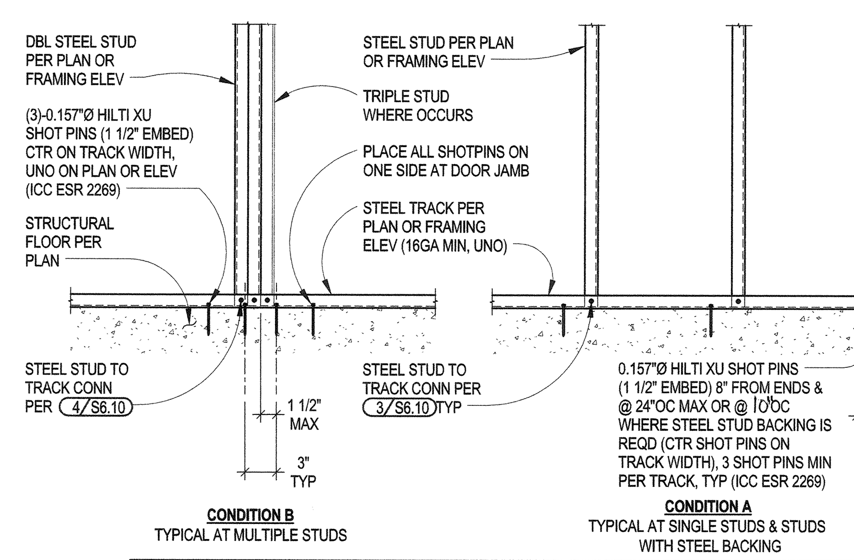

NOTES:
1. WHERE SHOTPIN IS LESS THAN 3" FROM EDGE OF CONCRETE SLAB, OR WHERE STUD TRACK SITS ON A CONCRETE CURB (6" WIDE OR LESS), CONTRACTOR HAS THE OPTION TO EITHER PROVIDE ANCHOR BOLTS PER TYPICAL BOTTOM TRACK ANCHORAGE AT CURB AND EXTERIOR STEEL STUDS DETAIL OR PROVIDE 3/8"Ø TITEN HD SCREW ANCHOR (2 1/2" EMBED) WITH 1 1/2" MINIMUM EDGE DISTANCE PER ICC ESR-2713 INTO STRUCTURAL CONCRETE IN LIEU OF SHOTPINS (ONE-FOR-ONE SUBSTITUTION).
2. WHERE STUD TRACK SITS ON NON-STRUCTURAL FLOOR MATERIAL SUCH AS TILE, TERRAZZO, ETC., PROVIDE TITEN HD ANCHORS PER NOTE 1.

TYPICAL BOTTOM TRACK ANCHORAGE AT INTERIOR STEEL STUDS

SCALE: 1" = 1'-0"

1 / S6.10

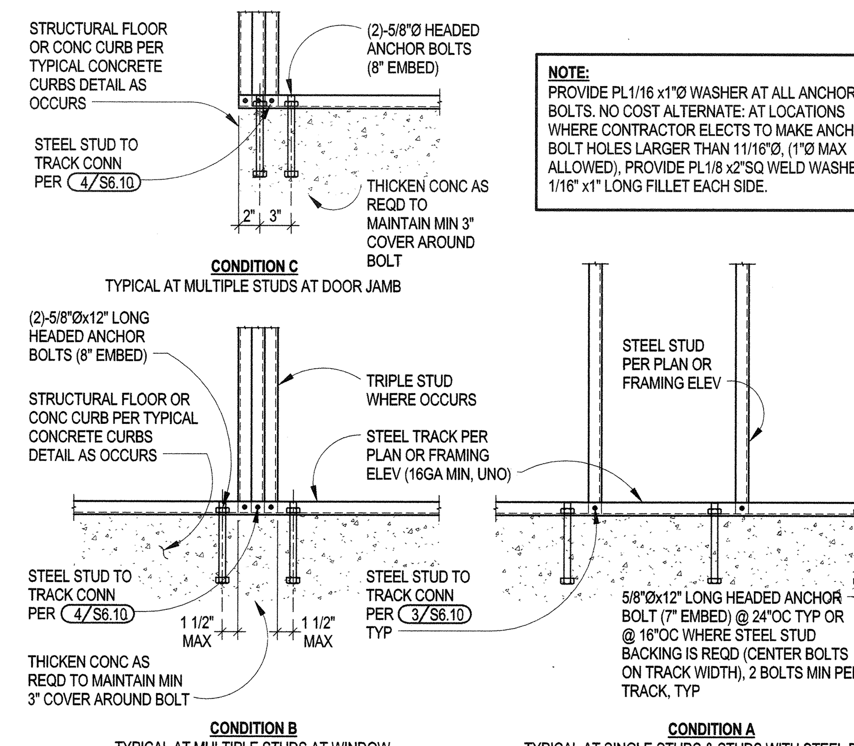

NOTE:
PROVIDE PL1/16 x1"Ø WASHER AT ALL ANCHOR BOLTS. NO COST ALTERNATE: AT LOCATIONS WHERE CONTRACTOR ELECTS TO MAKE ANCHOR BOLT HOLES LARGER THAN 11/16"Ø, (1"Ø MAX ALLOWED), PROVIDE PL1/8 x2"SQ WELD WASHER W/ 1/16" x1" LONG FILLET EACH SIDE.

TYPICAL BOTTOM TRACK ANCHORAGE AT CURB AND EXTERIOR STEEL STUDS

SCALE: 1" = 1'-0"

2 / S6.10

architecture
www.hpiarchitecture.com
115 22nd street
Newport Beach, CA 92663
o: 949. 675. 6442

CONSULTANTS
STRUCTURAL ENGINEERS
3900 Cover Street
Long Beach, CA 90808
562.985.3200 P
562.985.1011 F
MHP JN 14-0451-00

AUG 16 2018

SEALS / APPROVALS

IDENTIFICATION STAMP
DIV. OF THE STATE ARCHITECT
FILE: 30-C2
A# 04-116810
AC — FLS — SS TY
DATE AUG 31 2018

PROJECT TITLE
JOHNSON STUDENT CENTER
INCREMENT 2
1530 W 17TH ST SANTA ANA CA 92706

RANCHO SANTIAGO Community College District

SUBMITTALS		
#	DATE	DESCRIPTION
	08/13/2018	DSA FINAL SUBMITTAL

PROJECT IDENTIFICATION Project Number

THESE DRAWINGS ORIGINALLY CREATED IN AUTODESK REVIT V. 2016 U.O.N.

THE ORIGINAL SIZE OF THIS SHEET IS 30" X 42".

DRAWN BY JA / SMA / AM

CHECKED BY DCF

THESE DRAWINGS AND SPECIFICATIONS ARE THE PROPERTY AND COPYRIGHT OF THE ARCHITECT AND SHALL NOT BE USED ON ANY OTHER PROJECT OR LOCATIONS EXCEPT AS DESCRIBED ON THE DRAWINGS, WITHOUT WRITTEN AGREEMENT WITH THE ARCHITECT.

© HILL PARTNERSHIP INC. 2017

SHEET TITLE
TYPICAL STEEL STUD SECTIONS AND DETAILS

SHEET NUMBER
S6.10

DSA FINAL SUBMITTAL

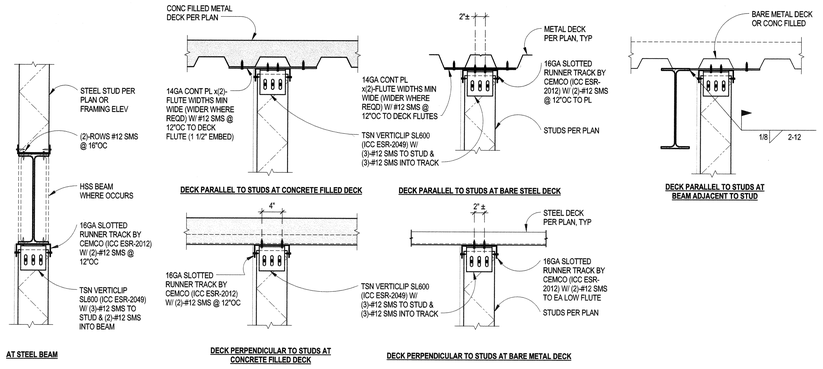

EXTERIOR STEEL STUD WALL TO UNDERSIDE OF STEEL DECK (13/S6.11)
SCALE: 1" = 1'-0"

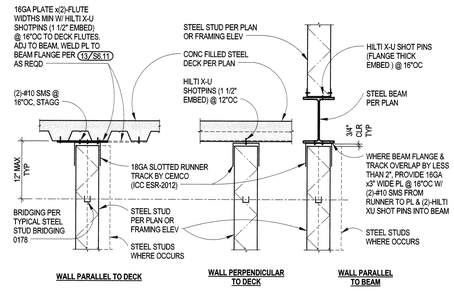

NON-BEARING STEEL INTERIOR STUD WALL TO CONCRETE FILLED STEEL DECK (9/S6.11)
SCALE: 3/4" = 1'-0"

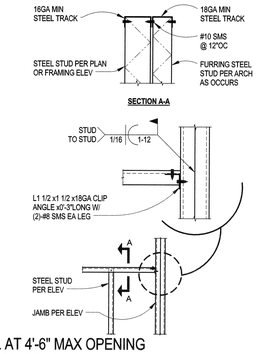

SILL AT 4'-6" MAX OPENING IN NON-BEARING EXTERIOR STEEL STUD WALL (5/S6.11)
SCALE: 3/4" = 1'-0"

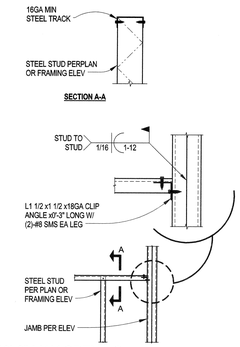

SILL AT 10'-0" MAX OPENING IN NON-BEARING INTERIOR STEEL STUD WALL (1/S6.11)
SCALE: 3/4" = 1'-0"

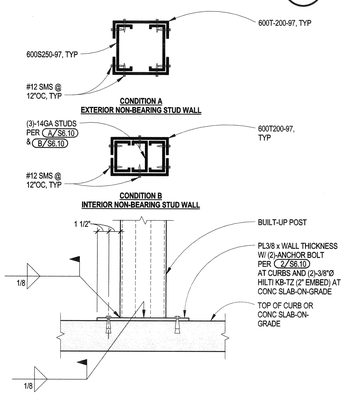

POST BETWEEN 12'-6" WIDE OPENINGS (14/S6.11)
SCALE: 1 1/2" = 1'-0"

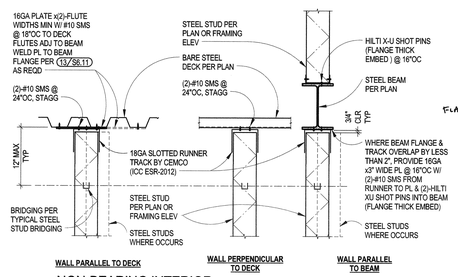

NON-BEARING INTERIOR STEEL STUD WALL TO BARE STEEL DECK (10/S6.11)
SCALE: 3/4" = 1'-0"

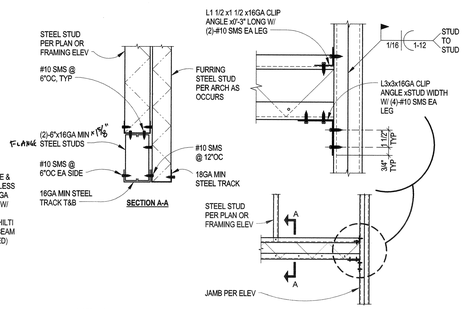

HEADER AT 4'-6" MAX OPENING IN NON-BEARING EXTERIOR STEEL STUD WALL (6/S6.11)
SCALE: 3/4" = 1'-0"

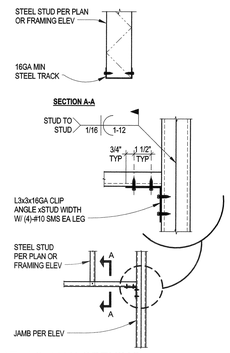

HEADER AT 4'-6" MAX OPENING IN NON-BEARING INTERIOR STEEL STUD WALL (2/S6.11)
SCALE: 3/4" = 1'-0"

NOT USED (11/S6.11)
SCALE: NONE

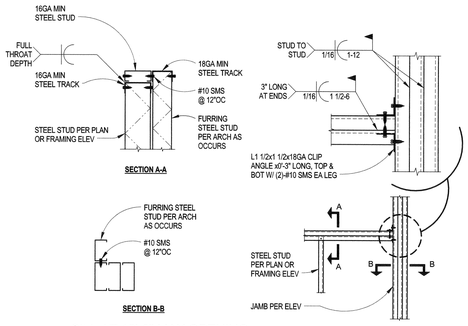

SILL AT 12'-6" MAX OPENING IN NON-BEARING EXTERIOR STEEL STUD WALL (7/S6.11)
SCALE: 3/4" = 1'-0"

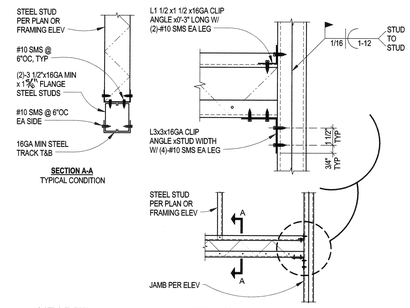

HEADER AT 10'-0" MAX OPENING IN NON-BEARING INTERIOR STEEL STUD WALL (3/S6.11)
SCALE: 3/4" = 1'-0"

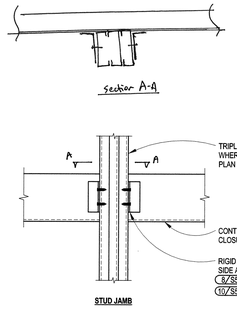

MULTIPLE NON-BEARING EXTERIOR STEEL STUD JAMB TO FLOOR OR ROOF DECK CONNECTION (12/S6.11)
SCALE: 1 1/2" = 1'-0"

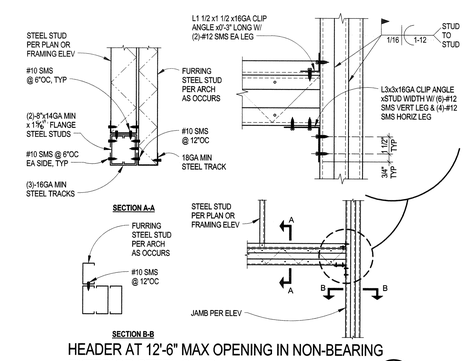

HEADER AT 12'-6" MAX OPENING IN NON-BEARING EXTERIOR STEEL STUD WALL (8/S6.11)
SCALE: 3/4" = 1'-0"

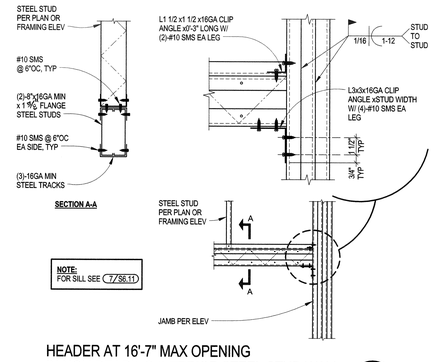

HEADER AT 16'-7" MAX OPENING IN NON-BEARING INTERIOR STEEL STUD WALL (4/S6.11)
SCALE: 3/4" = 1'-0"

8/14/2018 6:43:31 PM D:\Revit Local Files\14-0451-00_SA College Johnson Center_R16_Struc_jacobgun.rvt

HPI architecture
www.hpiarchitecture.com
115 22nd street
Newport Beach, CA 92663
o: 949. 675. 6442

CONSULTANTS
MHP STRUCTURAL ENGINEERS
3900 Cover Street
Long Beach, CA 90808
562.985.3200 P
562.985.1011 F
MHP JN 14-0451-00

AUG 16 2018

SEALS / APPROVALS

IDENTIFICATION STAMP
DIV. OF THE STATE ARCHITECT
FILE: 30-C2
A# 04-116810
AC — FLS — SS TY
DATE AUG 31 2018

PROJECT TITLE
JOHNSON STUDENT CENTER
INCREMENT 2
1530 W 17TH ST SANTA ANA CA 92706

RANCHO SANTIAGO Community College District

SUBMITTALS

#	DATE	DESCRIPTION
	08/13/2018	DSA FINAL SUBMITTAL

PROJECT IDENTIFICATION Project Number

THESE DRAWINGS ORIGINALLY CREATED IN AUTODESK REVIT V. 2016 U.O.N.

THE ORIGINAL SIZE OF THIS SHEET IS 30" X 42".

DRAWN BY JA / SMA / AM

CHECKED BY DCF

THESE DRAWINGS AND SPECIFICATIONS ARE THE PROPERTY AND COPYRIGHT OF THE ARCHITECT AND SHALL NOT BE USED ON ANY OTHER PROJECT OR LOCATIONS EXCEPT AS DESCRIBED ON THE DRAWINGS, WITHOUT WRITTEN AGREEMENT WITH THE ARCHITECT.

© HILL PARTNERSHIP INC. 2017

SHEET TITLE
TYPICAL STEEL STUD SECTIONS AND DETAILS

SHEET NUMBER
S6.11

DSA FINAL SUBMITTAL

8/16/2018 8:43:33 PM D:\Revit Local Files\14-0451-00_SA College Johnson Center_R16_Shuc_jarcoaga.rvt

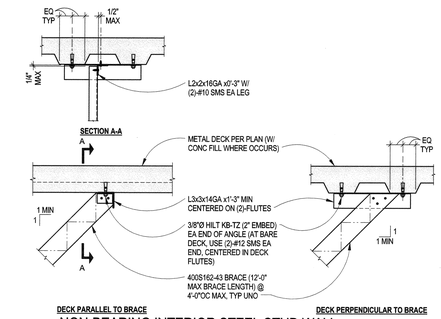

NON-BEARING INTERIOR STEEL STUD WALL OR SOFFIT BRACING TO DECK CONNECTIONS

SCALE: 1" = 1'-0" (4 / S6.12)

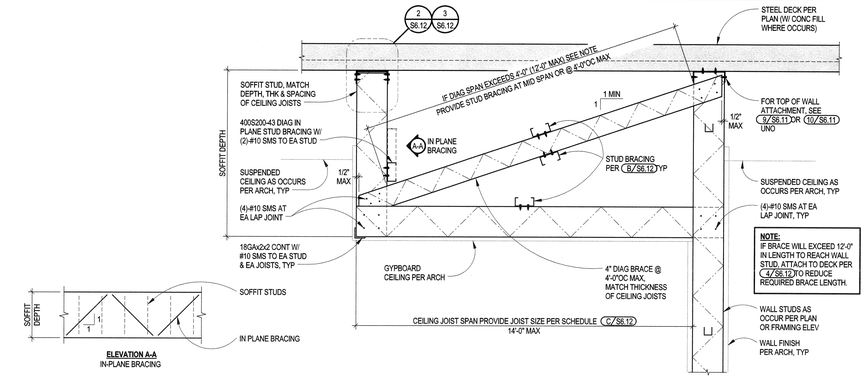

STEEL STUD CEILING SOFFIT TO STEEL DECK AND STEEL STUD WALL

SCALE: 1" = 1'-0" (A / S6.12)

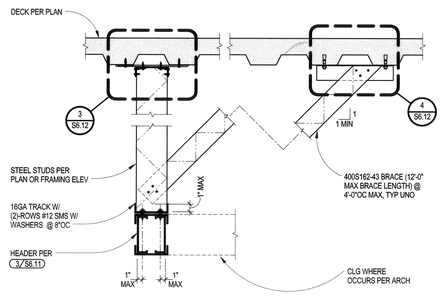

BRACED HEADER AT STEEL STUD OPENING

SCALE: 1" = 1'-0" (5 / S6.12)

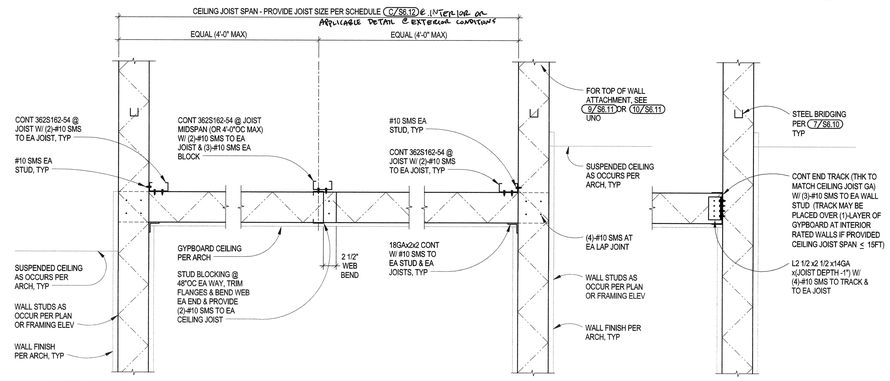

STEEL STUD CEILING JOISTS TO STEEL STUD WALL

SCALE: 1" = 1'-0" (B / S6.12)

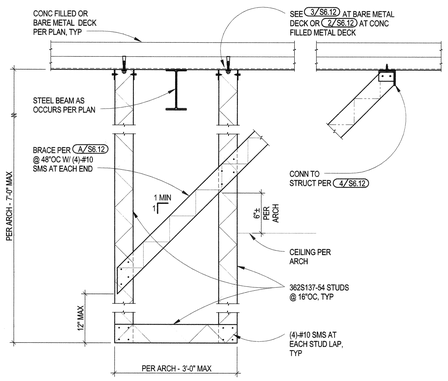

SOFFIT AT METAL DECK

SCALE: 1" = 1'-0" (6 / S6.12)

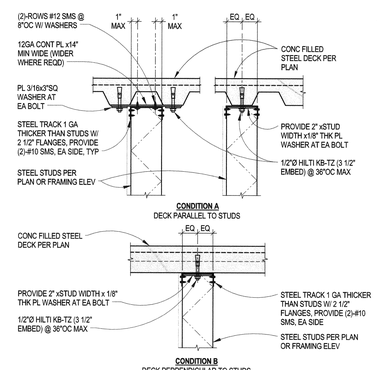

STEEL SOFFIT STUDS HUNG FROM CONCRETE FILLED STEEL DECK

SCALE: 1" = 1'-0" (2 / S6.12)

TYPICAL CEILING JOIST - HORIZONTAL SPAN SCHEDULE

CEILING JOIST SPAN	MIN JOIST/STUD SIZE REQUIRED FOR SCHEDULED SPACING (L/360 DEFLECTION CRITERIA) (13 PSF)		
	12"OC	16"OC	24"OC
8 FT	362S162-33	362S162-33	362S162-33
10 FT	362S162-33	362S162-33	362S162-43
12 FT	362S162-33	362S162-43	600S162-43
14 FT	600S162-43	600S162-43	600S162-43
16 FT	600S162-43	600S162-43	800S162-54
18 FT	600S162-43	800S162-43	800S162-54
20 FT	800S162-43	800S162-54	---
22 FT	800S162-54	800S162-68	---

NOTES:
1. SCHEDULE IS FOR CEILINGS SUPPORTING SELF WEIGHT. NOT TO BE USED IN CEILING ATTIC SITUATIONS.
2. SEE ADDITIONAL INFORMATION ON BUILDING PLANS FOR SPECIFIC REQUIREMENTS.
3. ALTERNATE JOIST/STUD SIZES MAY BE USED IF THE SECTION PROPERTIES OF THE STUDS USED EXCEED, IN ALL CASES, THE PROPERTIES OF THE SIZES NOTED IN THE SCHEDULE.
4. SEE DETAIL 6 / S6.12 FOR LATERAL BRACING/BLOCKING.

INTERIOR
STEEL STUD CEILING JOIST SCHEDULE

SCALE: 12" = 1'-0" (C / S6.12)

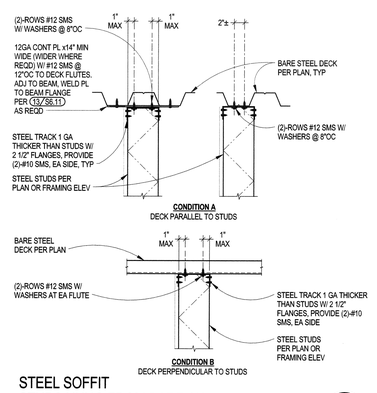

STEEL SOFFIT STUDS HUNG FROM BARE STEEL DECK

SCALE: 1" = 1'-0" (3 / S6.12)

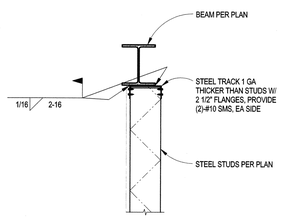

STEEL SOFFIT STUDS HUNG FROM STEEL BEAM

SCALE: 1" = 1'-0" (1 / S6.12)

HPI architecture
www.hpiarchitecture.com
115 22nd street
Newport Beach, CA 92663
o: 949. 675. 6442

CONSULTANTS

MHP STRUCTURAL ENGINEERS
3900 Cover Street
Long Beach, CA 90808
562.985.3200 P
562.985.1011 F
MHP JN 14-0451-00

AUG 16 2018

SEALS / APPROVALS

IDENTIFICATION STAMP
DIV. OF THE STATE ARCHITECT
FILE: 30-C2
A# 04-116810
AC — FLS — SS TY
DATE AUG 31 2018

PROJECT TITLE
JOHNSON STUDENT CENTER
INCREMENT 2
1530 W 17TH ST SANTA ANA CA 92706

RANCHO SANTIAGO Community College District

SUBMITTALS

#	DATE	DESCRIPTION
	08/13/2018	DSA FINAL SUBMITTAL

PROJECT IDENTIFICATION Project Number

THESE DRAWINGS ORIGINALLY CREATED IN AUTODESK REVIT V. 2016 U.O.N.

THE ORIGINAL SIZE OF THIS SHEET IS 30" X 42".

DRAWN BY JA / SMA / AM

CHECKED BY DCF

THESE DRAWINGS AND SPECIFICATIONS ARE THE PROPERTY AND COPYRIGHT OF THE ARCHITECT AND SHALL NOT BE USED ON ANY OTHER PROJECT OR LOCATIONS EXCEPT AS DESCRIBED ON THE DRAWINGS, WITHOUT WRITTEN AGREEMENT WITH THE ARCHITECT.

© HILL PARTNERSHIP INC. 2017

SHEET TITLE
TYPICAL STEEL STUD CEILING SECTIONS AND DETAILS

SHEET NUMBER
S6.12

DSA FINAL SUBMITTAL

8/16/2018 6:43:55 PM D:\Revit Local Files\14-0451-00_SA College Johnson Center_R16_Struc_jarciaga.rvt

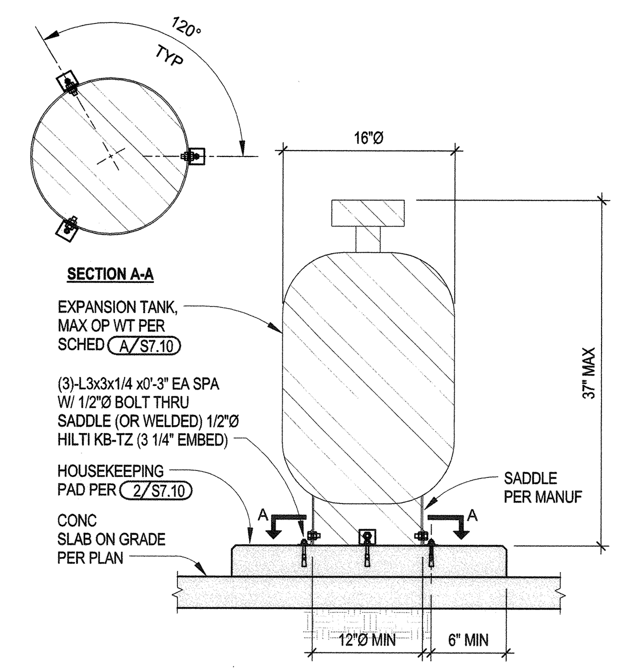

EXPANSION TANK ANCHORAGE
SCALE: 1/2" = 1'-0" — 12/S7.10

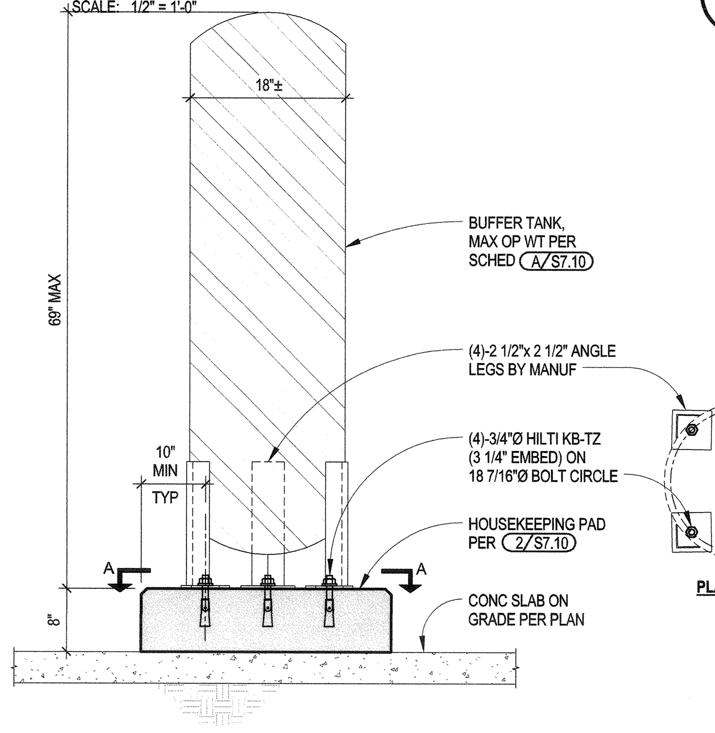

BUFFER TANK ANCHORAGE
SCALE: 3/4" = 1'-0" — 13/S7.10

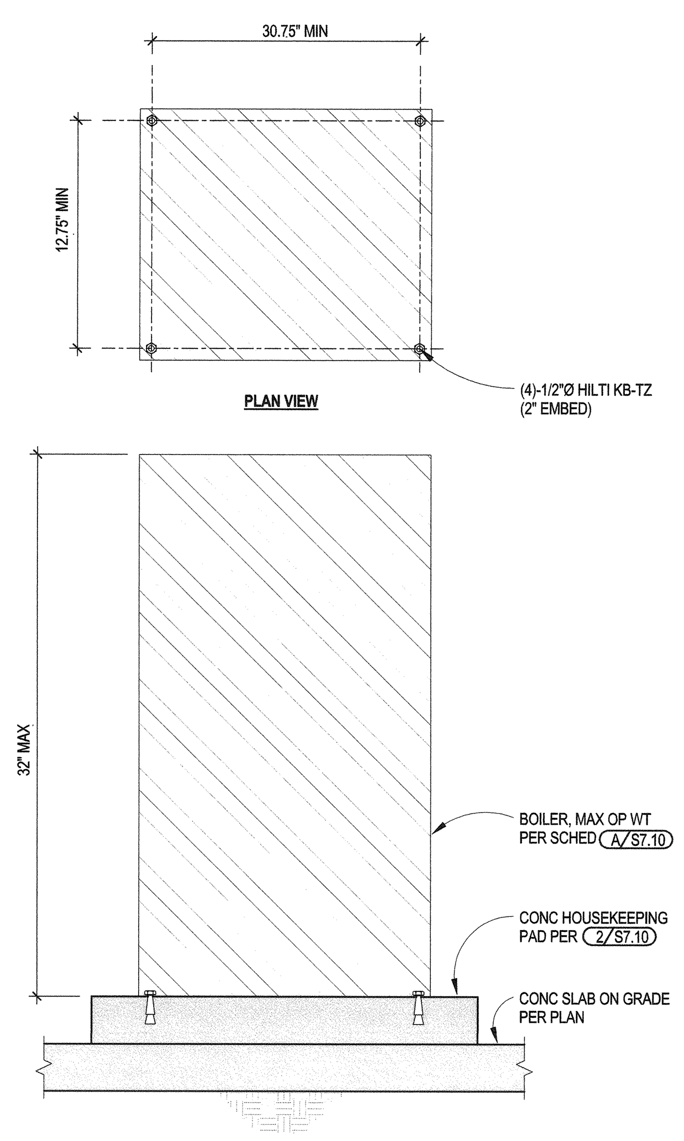

BOILER ANCHORAGE
SCALE: 3/4" = 1'-0" — 9/S7.10

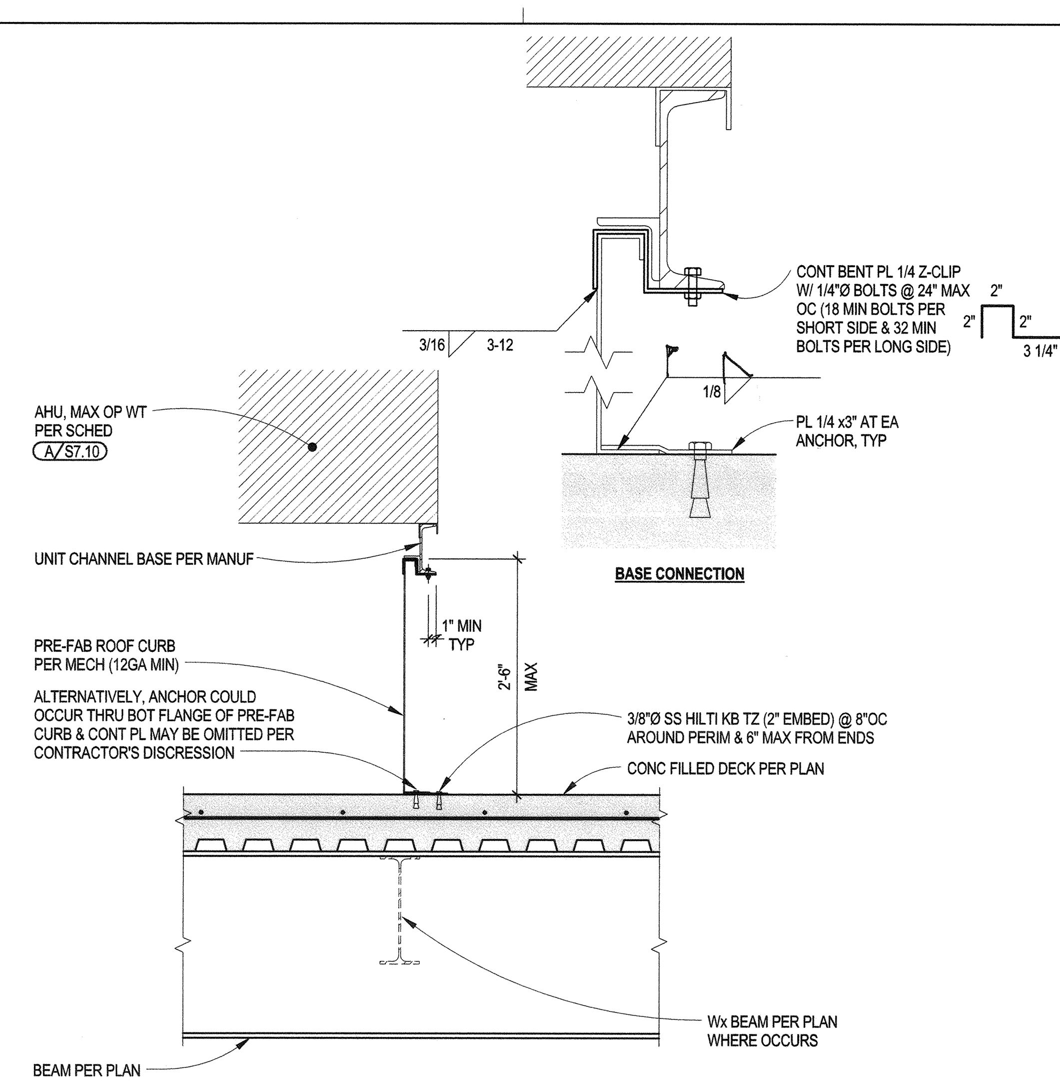

AHU CURB ANCHORAGE
SCALE: 3/4" = 1'-0" — 5/S7.10

REPROGRAPHIC EQUIPMENT ANCHORAGE SCHEDULE							
MARK	DESCRIPTION	LOCATION	DIMENSIONS W	D	H	MAXIMUM OPERATING WEIGHT	DETAIL
PE003	PUBLISHER EQUIPMENT	SOG	179"	48" +/-	49"	3,300#	11/S7.20
PE006	CUTTER	SOG	69"	41"+/-	59"	2,600#	12/S7.20
PE007	DRILL PRESS	SOG	36" +/-	36" +/-	60"	550#	13/S7.20

MECHANICAL EQUIPMENT ANCHORAGE SCHEDULE							
MARK	DESCRIPTION	LOCATION	DIMENSIONS W	D	H	MAXIMUM OPERATING WEIGHT	DETAIL
AHU-1	HAAKON CUSTOM AHU	ROOF	385"	223"	71"	20,210#	5/S7.10
AHU-2	HAAKON CUSTOM AHU	ROOF	281"	212"	71"	13,540#	5/S7.10
B-1 & B-2	RAYPAK XFYRE H7-400A	BOILER ROOM	31"	22"	32"	500#	9/S7.10
CU-1 - CU-5	MITSUBISHI PUY-A24NHA4	ROOF	38"	14"	37"	163#	3/S7.10
CU-6 & CU-7	MITSUBISHI PUY-A12NHA3	ROOF	32"	14"	24"	90#	3/S7.10
AC-1 - AC-5	MITSUBISHI PKA-A24KA4	1ST FLOOR	46"	12"	15"	46#	8/S7.10
AC-6 & AC-7	MITSUBISHI PKA-A12HA	1ST FLOOR	36"	10"	12"	29#	8/S7.10
EF-1 - EF-7	GREENHECK	ROOF	22"	22"	24"	100#	10/S7.10
GV-1	GREENHECK	ROOF	58"	58"	28"	128#	10/S7.10
ET-2	ARMSTRONG 85-L	BOILER ROOM	16"	16"	37"	285#	12/S7.10
BT-1	RAYPACK BUFFER TANK	BOILER ROOM	20"	20"	69"	870#	13/S7.10

ELECTRICAL EQUIPMENT ANCHORAGE SCHEDULE					
MARK	DIMENSIONS W	D	H	MAXIMUM OPERATING WEIGHT	DETAIL
112.5 KVA TRANSFORMER	34.5"	31.5"	51"	1263#	1/E6.03
750 KVA TRANSFORMER	86"	57"	64"	6500#	3/E6.01
DISTRIBUTION BOARDS (2DB1, 2DB2)	36"	10.4"	73.5"	300#	3/E6.02
EMERGENCY INVERTER ILLUMINATOR	30"	25"	47"	3025#	2/E6.04
MSB SWITCHBOARD	45"	18"	90"	1200#	1/E6.04

BOILER ROOM EQUIPMENT ANCHORAGE SCHEDULE							
MARK	DESCRIPTION	LOCATION	DIMENSIONS W	D	H	MAXIMUM OPERATING WEIGHT	DETAIL
GWH-1, GWH-2	BRADFORD WHITE	BOILER ROOM	28-1/4" DIAMETER		77-5/8"	1735#	11/S7.10
ET-1	AMTROL	BOILER ROOM	12" DIAMETER		13-3/8"	93#	17/S7.10

EQUIPMENT ANCHORAGE SCHEDULE
SCALE: 12" = 1'-0" — A/S7.10

NOT USED
SCALE: 3/4" = 1'-0" — 14/S7.10

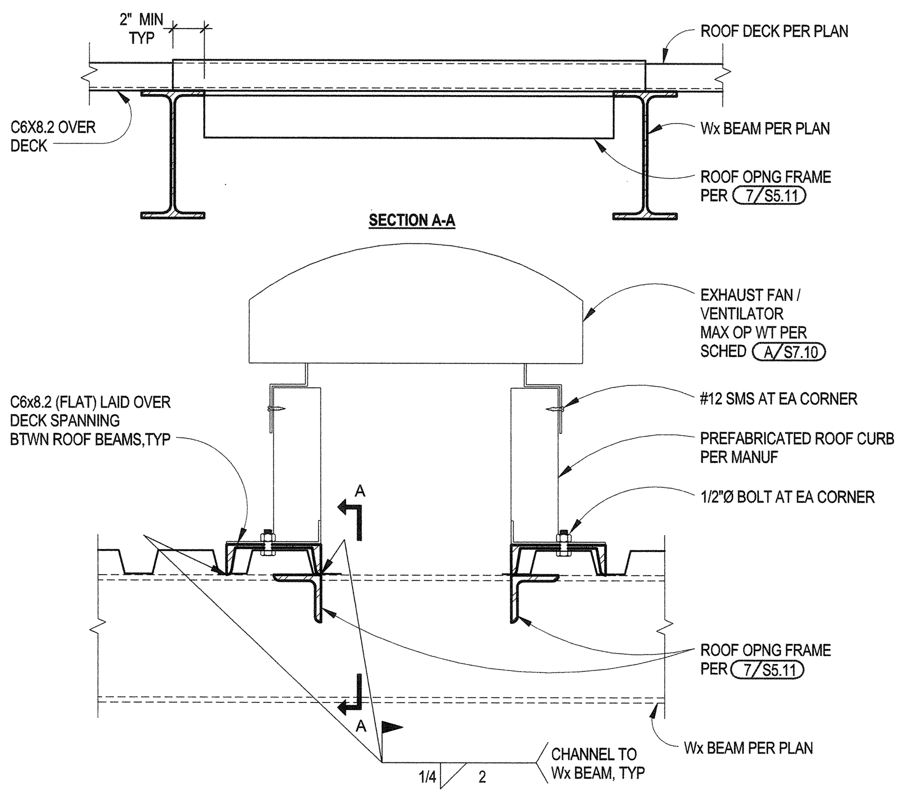

EXHAUST FAN / VENTILATOR ANCHORAGE
SCALE: 1 1/2" = 1'-0" — 10/S7.10

NOT USED
SCALE: 3/4" = 1'-0" — 6/S7.10

NOT USED
SCALE: 3/4" = 1'-0" — 7/S7.10

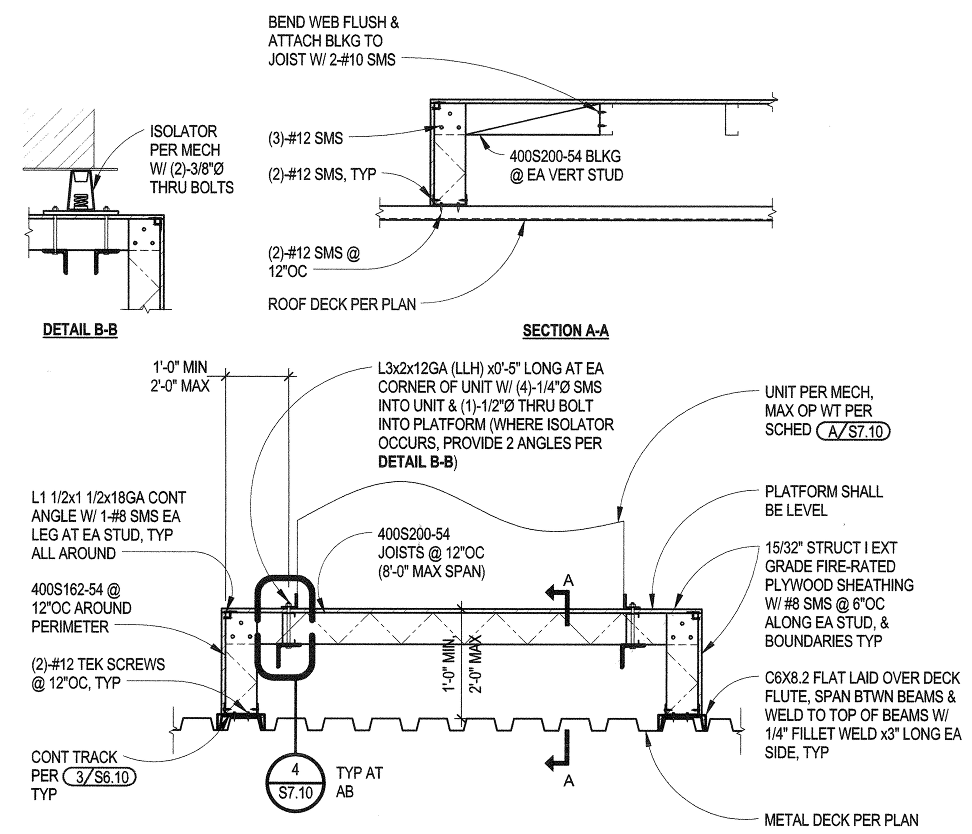

MECHANICAL EQUIPMENT PLATFORM ANCHORAGE
SCALE: 3/4" = 1'-0" — 3/S7.10

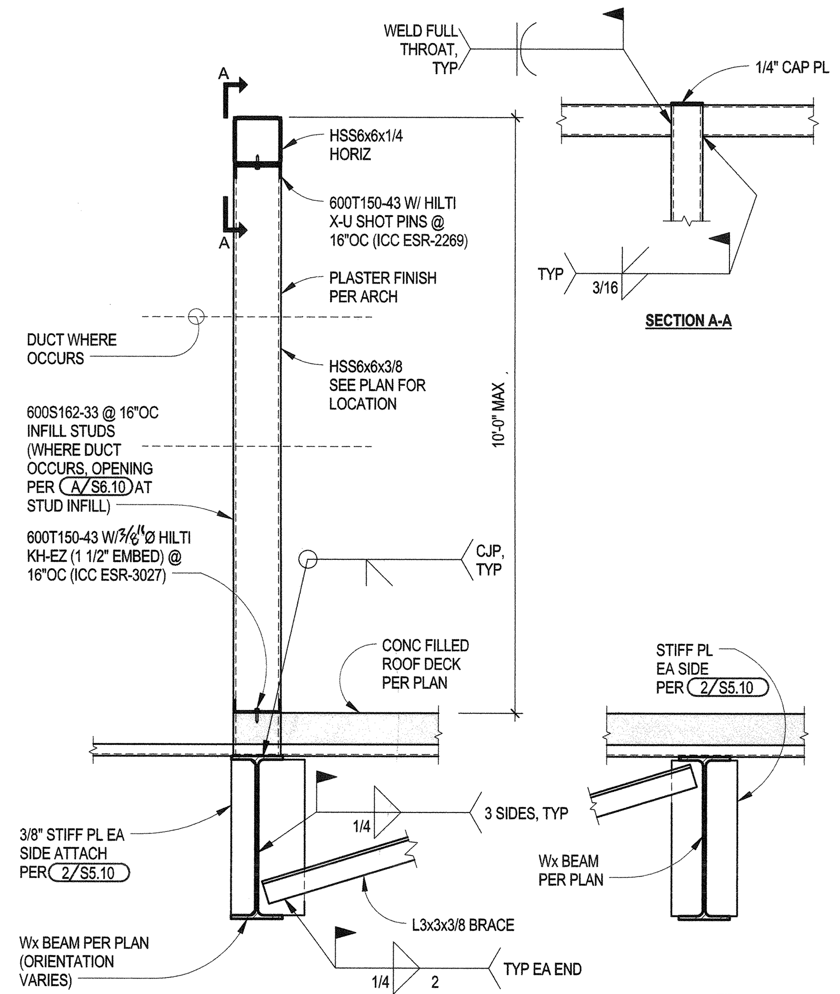

SCREEN WALL POST
SCALE: 3/4" = 1'-0" — 1/S7.10

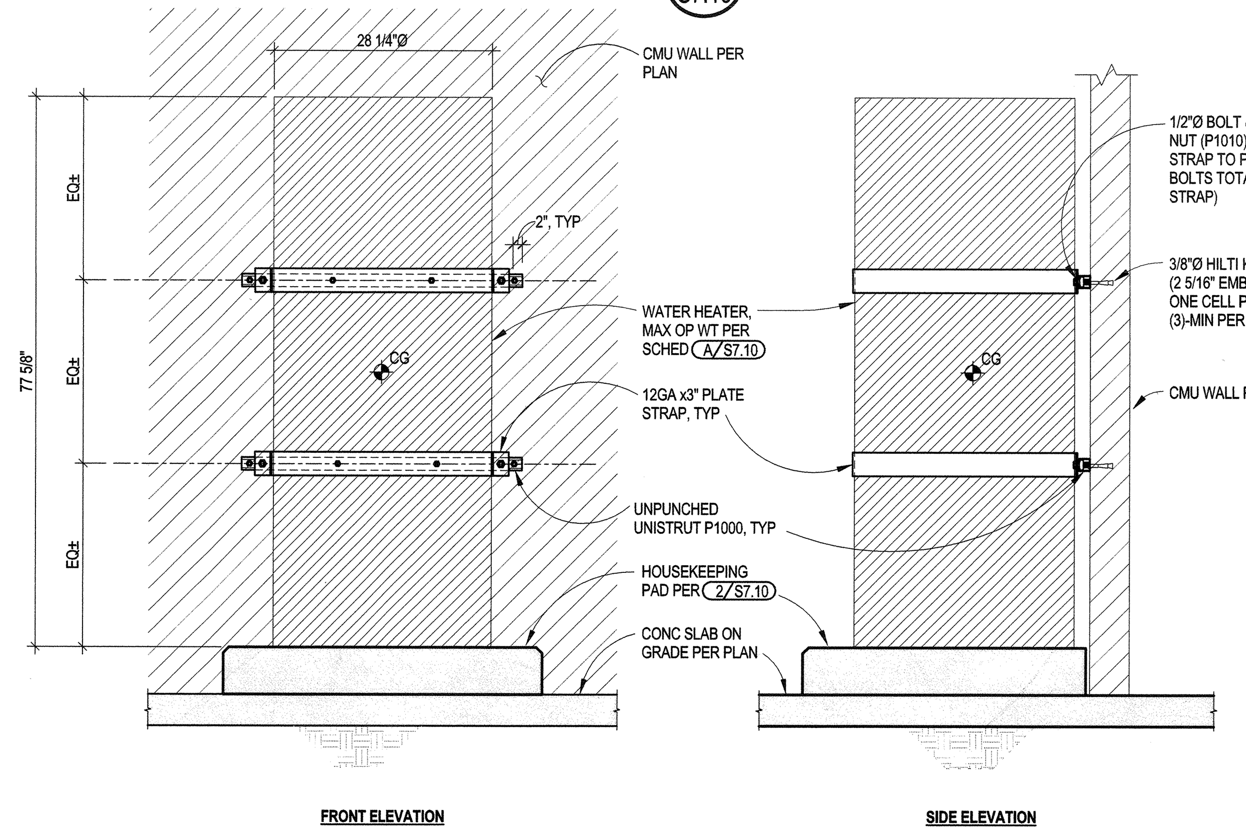

WATER HEATER (GWH-1, GWH-2) ANCHORAGE
SCALE: 3/4" = 1'-0" — 11/S7.10

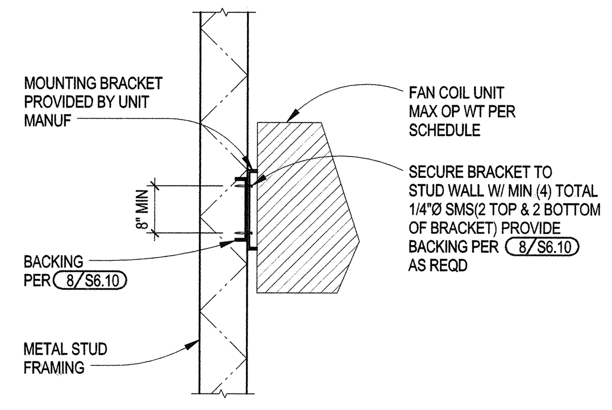

FAN COIL UNIT WALL MOUNTING ANCHORAGE
SCALE: 3/4" = 1'-0" — 8/S7.10

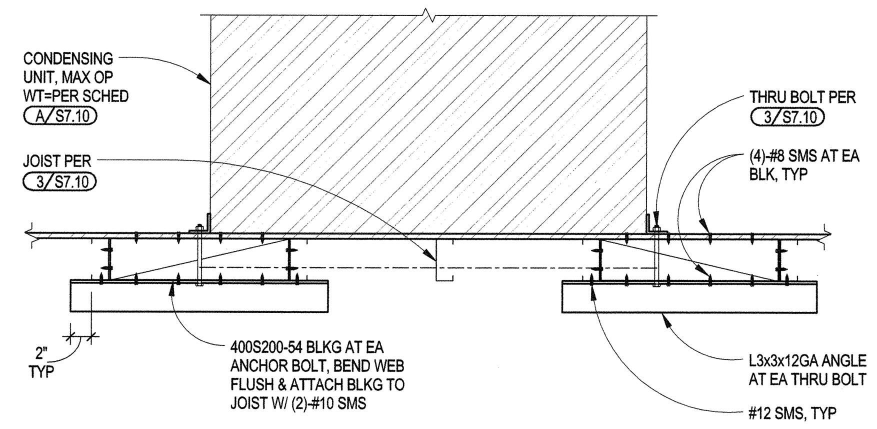

PLATFORM ANCHORAGE
SCALE: 1" = 1'-0" — 4/S7.10

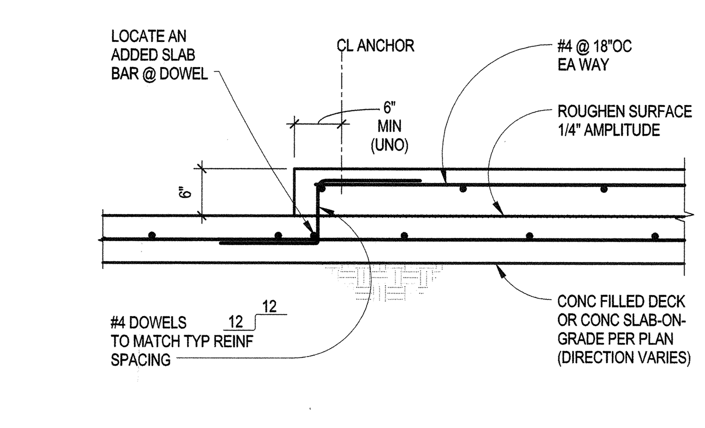

RAISED MECHANICAL OR HOUSEKEEPING PAD
SCALE: 3/4" = 1'-0" — 2/S7.10

HPI architecture
www.hpiarchitecture.com
115 22nd street
Newport Beach, CA 92663
o: 949. 675. 6442

CONSULTANTS
MHP STRUCTURAL ENGINEERS
3900 Cover Street
Long Beach, CA 90808
562.985.3200 P
562.985.1011 F
MHP JN 14-0451-00

AUG 16 2018

SEALS / APPROVALS

IDENTIFICATION STAMP
DIV. OF THE STATE ARCHITECT
FILE: 30-C2
A# 04-116810
AC — FLS — SS TY
DATE AUG 3 1 2018

PROJECT TITLE
JOHNSON STUDENT CENTER
INCREMENT 2
1530 W 17TH ST SANTA ANA CA 92706

RANCHO SANTIAGO Community College District

SUBMITTALS		
#	DATE	DESCRIPTION
	08/13/2018	DSA FINAL SUBMITTAL

PROJECT IDENTIFICATION Project Number
THESE DRAWINGS ORIGINALLY CREATED IN AUTODESK REVIT V. 2016 U.O.N.
THE ORIGINAL SIZE OF THIS SHEET IS 30" X 42".

DRAWN BY JA / SMA / AM

CHECKED BY DCF

THESE DRAWINGS AND SPECIFICATIONS ARE THE PROPERTY AND COPYRIGHT OF THE ARCHITECT AND SHALL NOT BE USED ON ANY OTHER PROJECT OR LOCATIONS EXCEPT AS DESCRIBED ON THE DRAWINGS, WITHOUT WRITTEN AGREEMENT WITH THE ARCHITECT.
© HILL PARTNERSHIP INC. 2017

SHEET TITLE
EQUIPMENT ANCHORAGE SECTIONS AND DETAILS

SHEET NUMBER
S7.10

DSA FINAL SUBMITTAL

D:\Revit Local Files\14-0451-00_SA College Johnson Center_R16_Struc_jarciaga.rvt
8/16/2018 6:43:59 PM

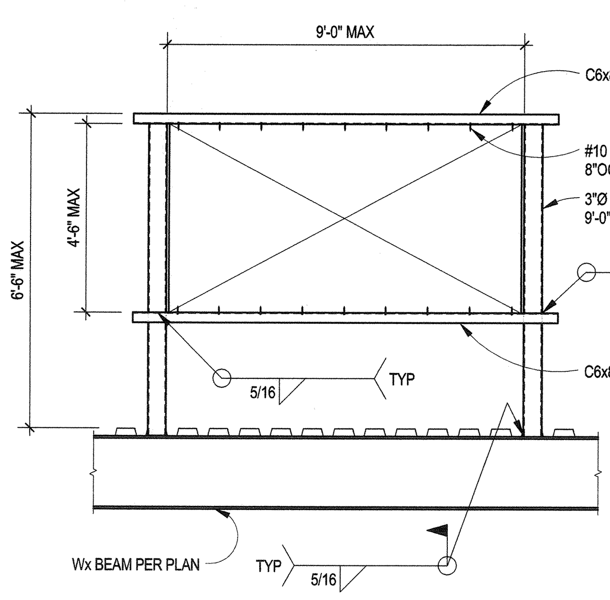

ROOFTOP DUCT SUPPORT 16/S7.20
SCALE: 1/2" = 1'-0"

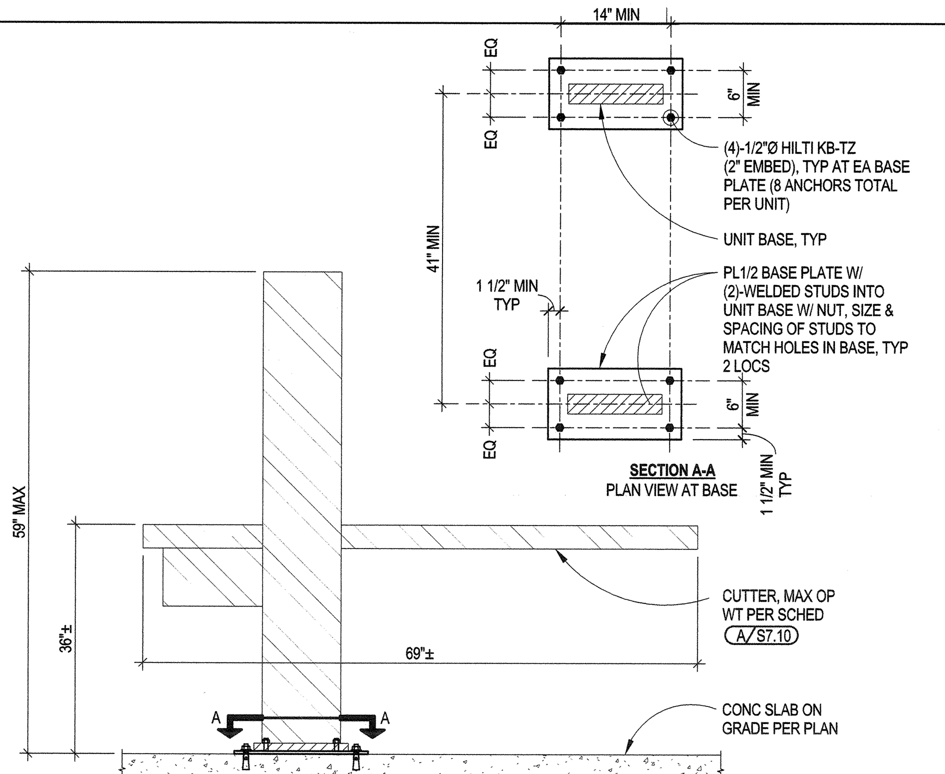

RELOCATED CUTTER ANCHORAGE (ITEM PE006) 12/S7.20
SCALE: 3/4" = 1'-0"

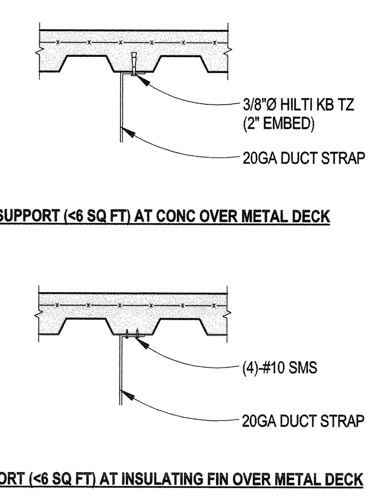

DUCT SUPPORT (DUCTS < 6 SQ FT) 8/S7.20
SCALE: 3/4" = 1'-0"

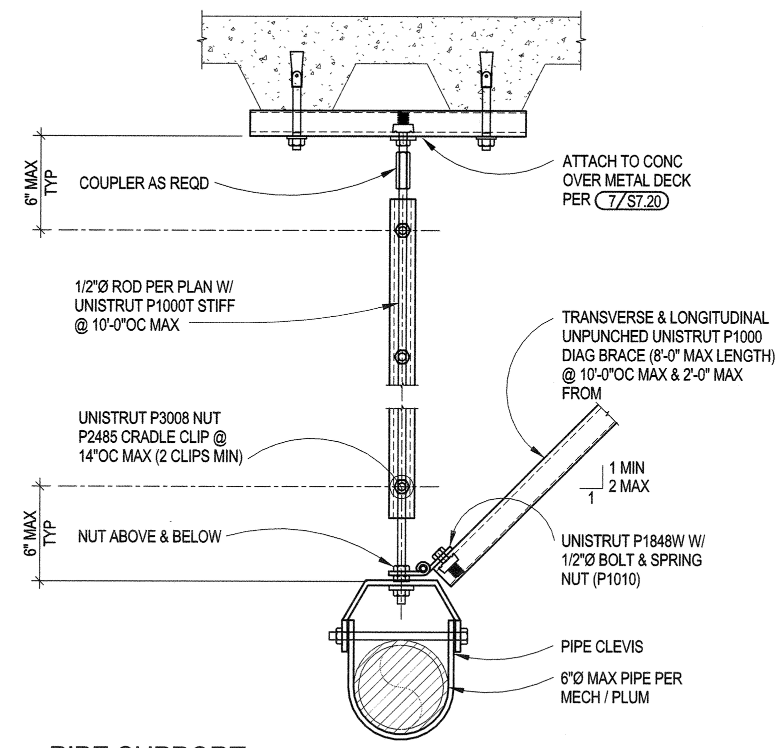

PIPE SUPPORT
AT CONCRETE FILLED METAL DECK 4/S7.20
SCALE: 1 1/2" = 1'-0"

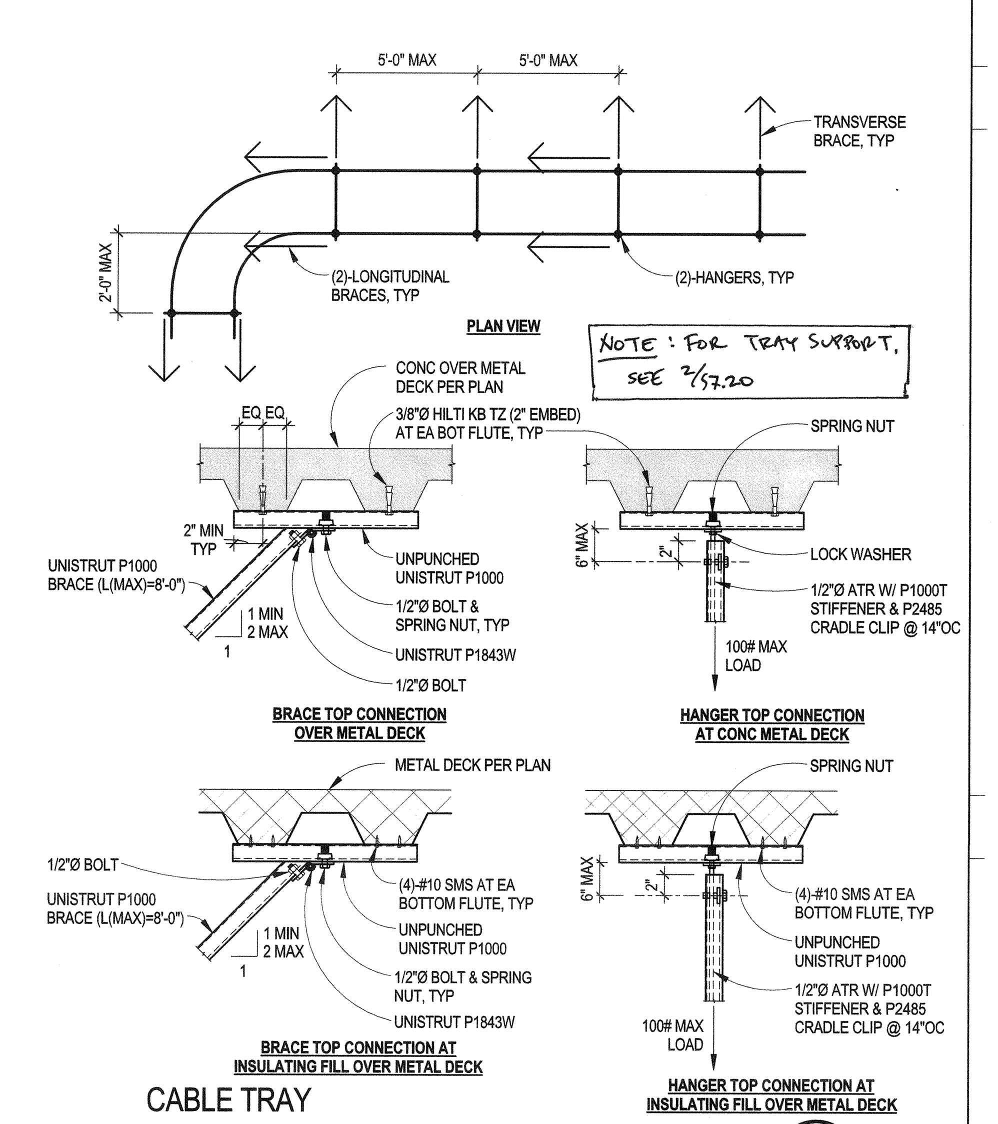

CABLE TRAY
HANGER AND BRACE TOP CONNECTION 1/S7.20
SCALE: 1" = 1'-0"

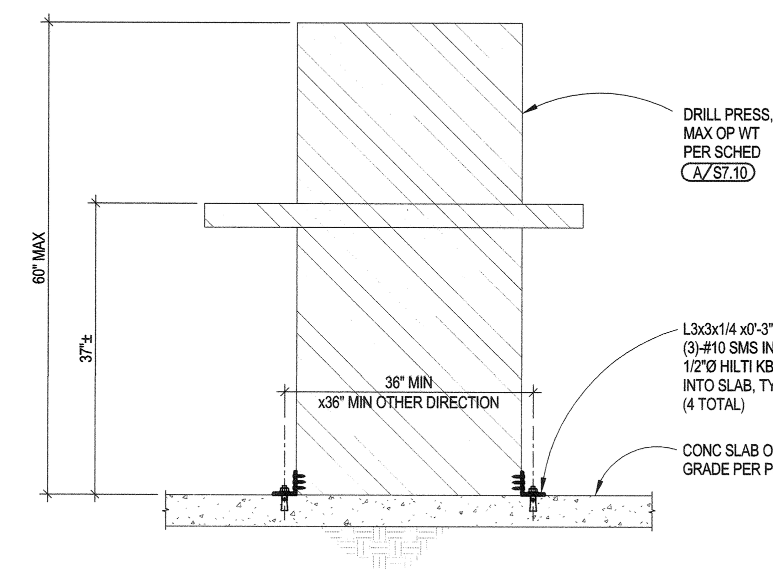

RELOCATED DRILL PRESS ANCHORAGE (ITEM PE007) 13/S7.20
SCALE: 3/4" = 1'-0"

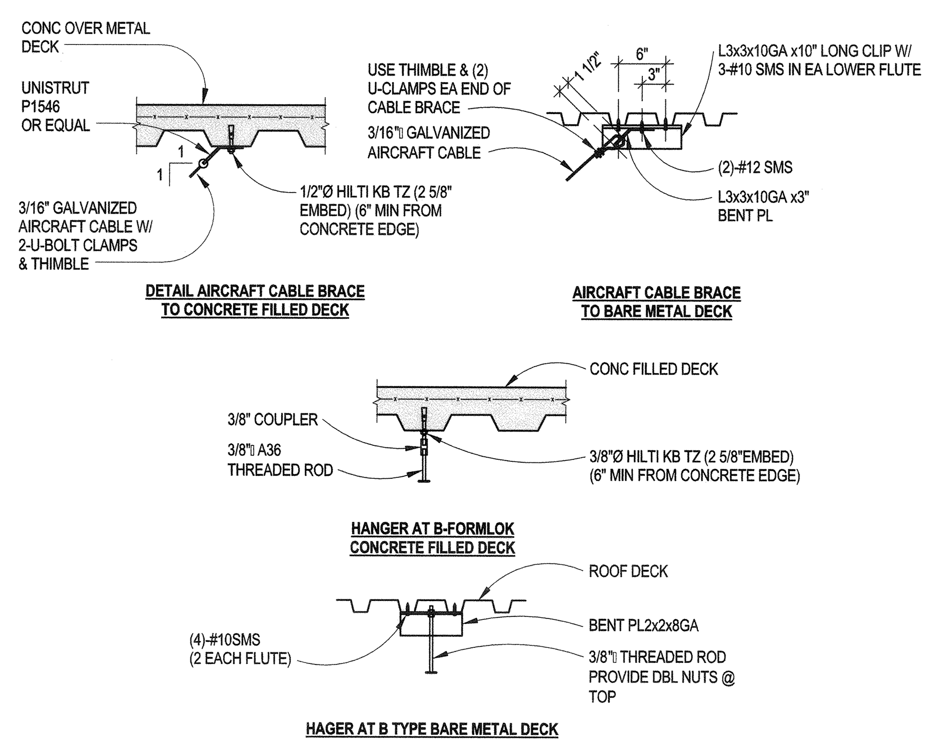

DUCT (AND MISC SUSPENDED ITEMS) SUPPORT ANCHORAGE (DUCTS > 6 SQ FT) 9/S7.20
SCALE: 3/4" = 1'-0"

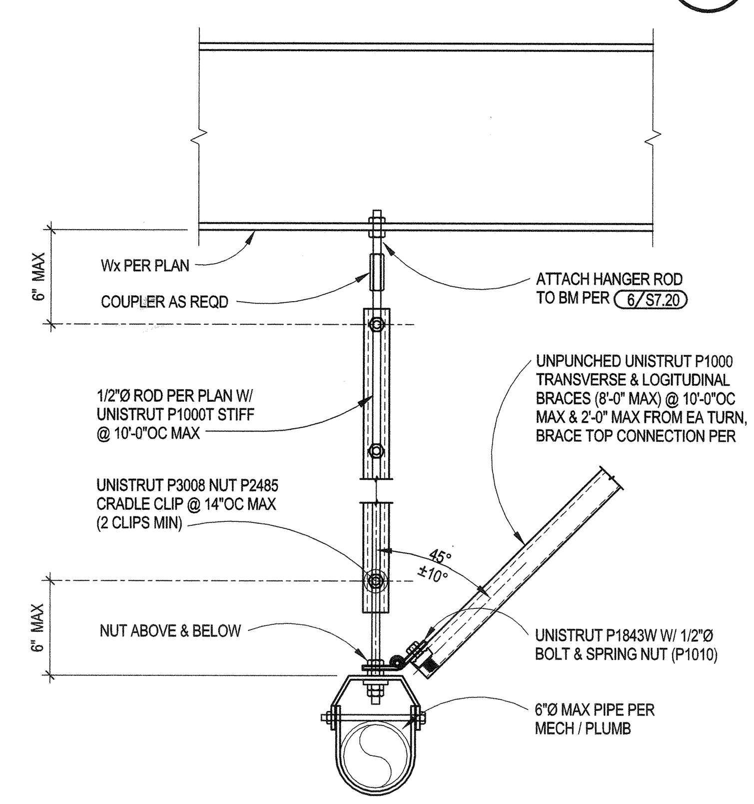

PIPE SUPPORT
AT STEEL BEAM (AT METAL DECK CONDITIONS) 5/S7.20
SCALE: 1 1/2" = 1'-0"

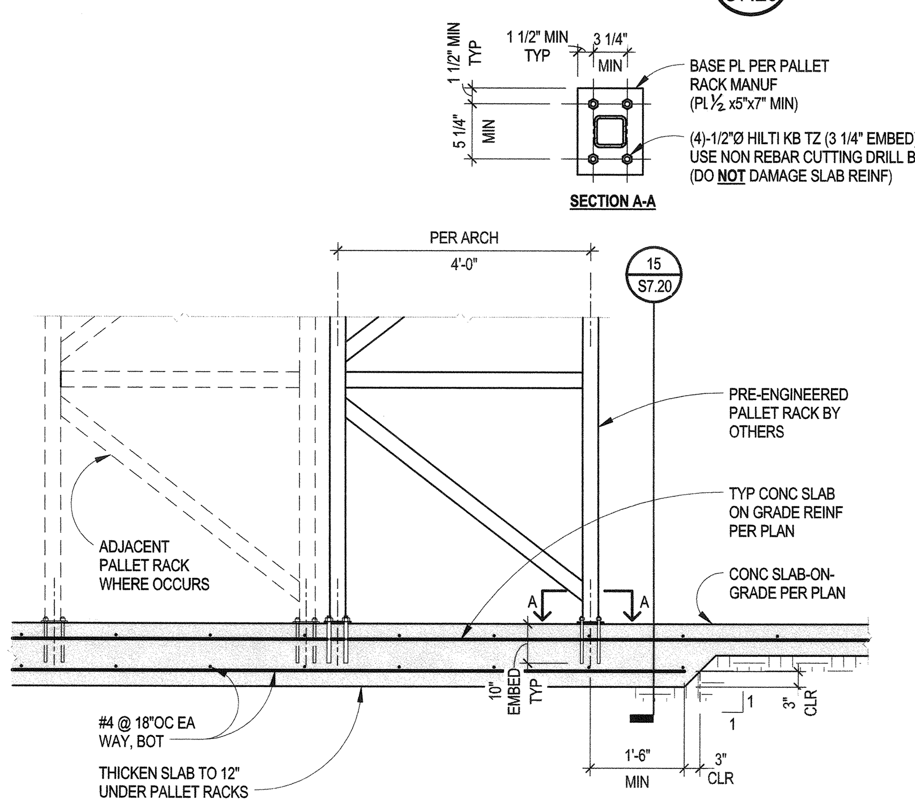

PALLET RACK ANCHORAGE DETAIL 14/S7.20
SCALE: 1/2" = 1'-0"

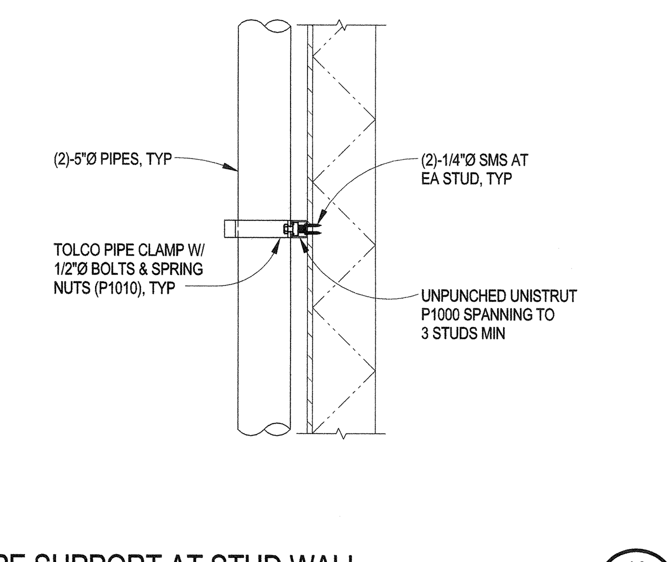

PIPE SUPPORT AT STUD WALL 10/S7.20
SCALE: 1" = 1'-0"

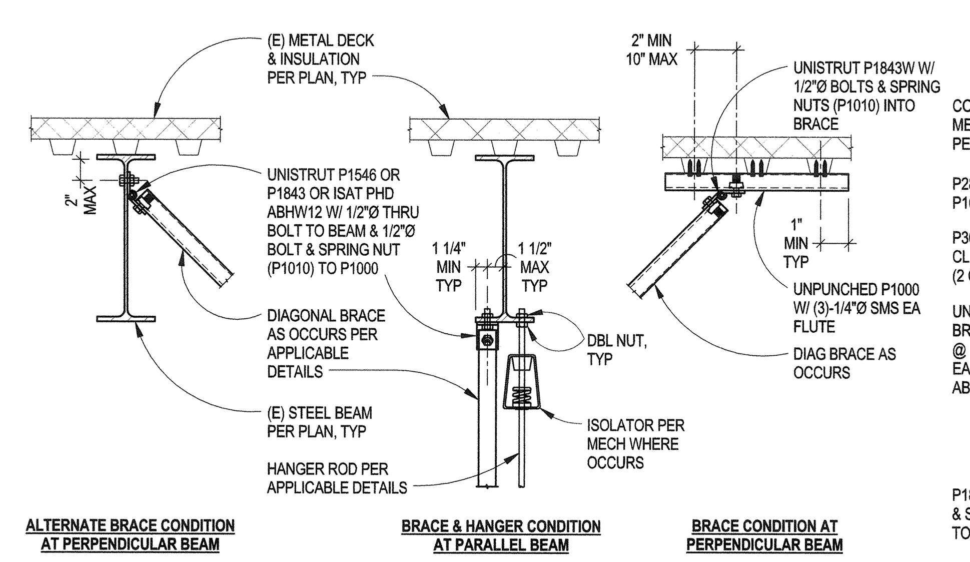

HANGER ROD & BRACE AT BARE METAL DECK 6/S7.20
SCALE: 1" = 1'-0"

NOTES:
1. PROVIDE TRANSVERSE BRACE AT 10'-0"OC AND 2'-0" MAXIMUM FROM EACH TURN.
2. PROVIDE (2)-LONGITUDINAL BRACES AT 20'-0"OC AND 2'-0" MAXIMUM FROM EACH TURN.

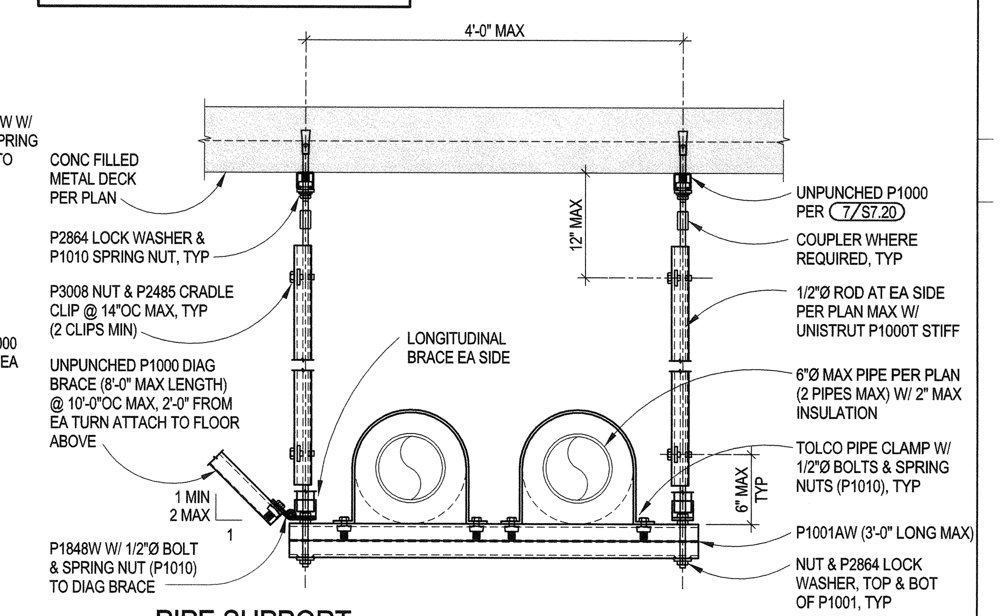

PIPE SUPPORT
& BRACING DETAIL AT CONC METAL DECK 2/S7.20
SCALE: 1" = 1'-0"

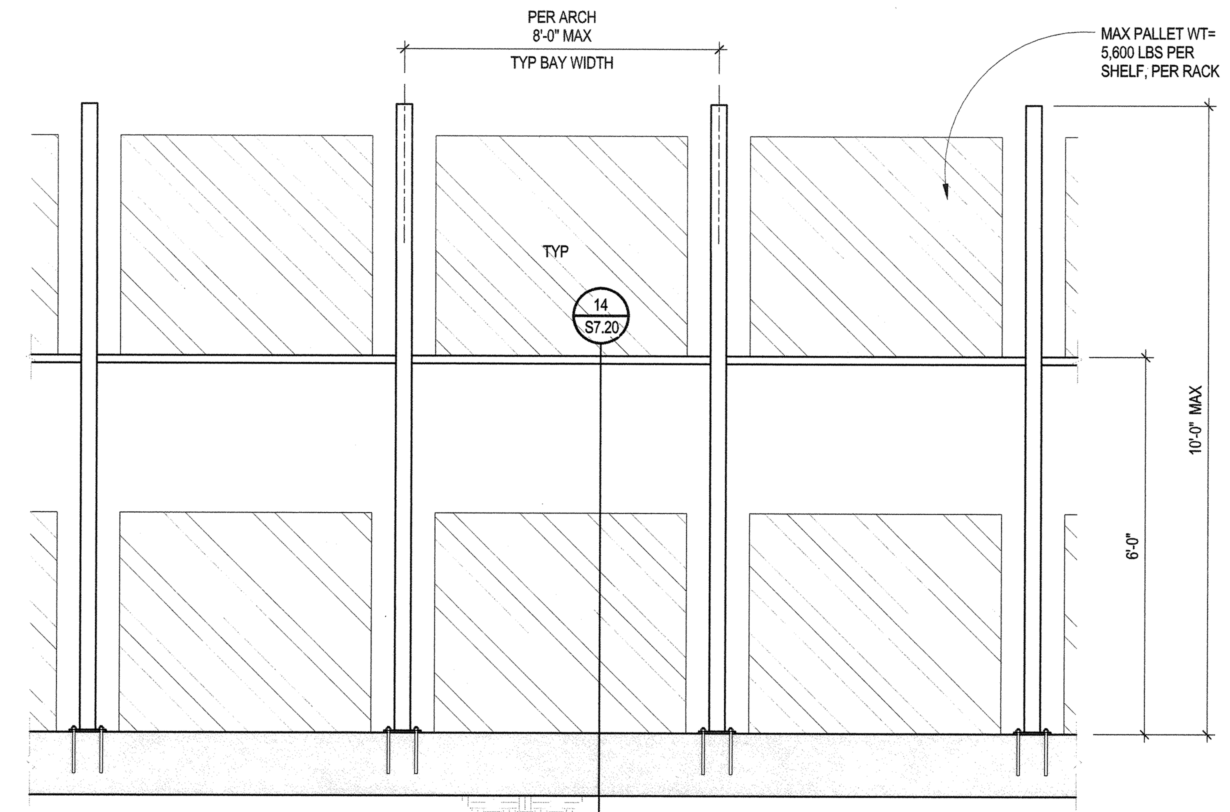

TYPICAL PALLET RACK ELEVATION 15/S7.20
SCALE: 1/2" = 1'-0"

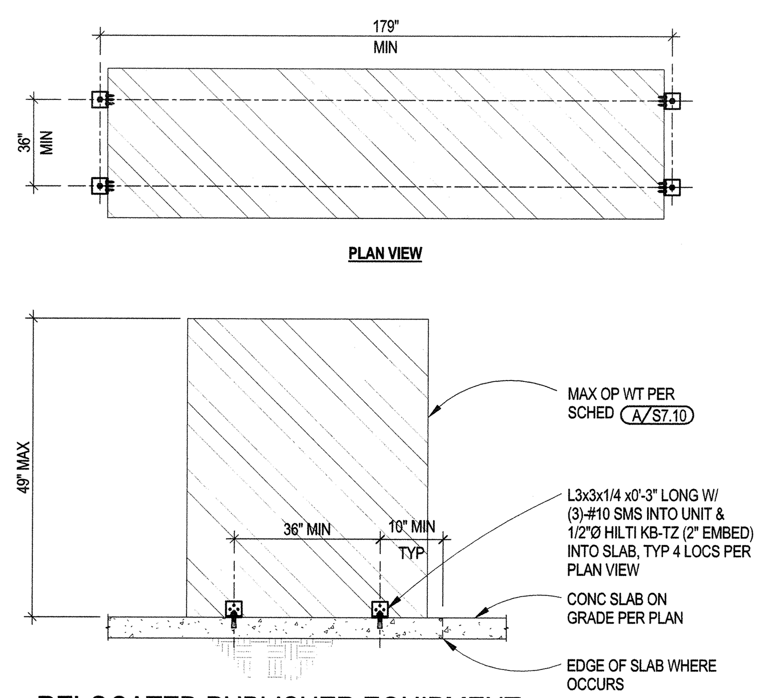

RELOCATED PUBLISHER EQUIPMENT ANCHORAGE (ITEM PE003) 11/S7.20
SCALE: 1/2" = 1'-0"

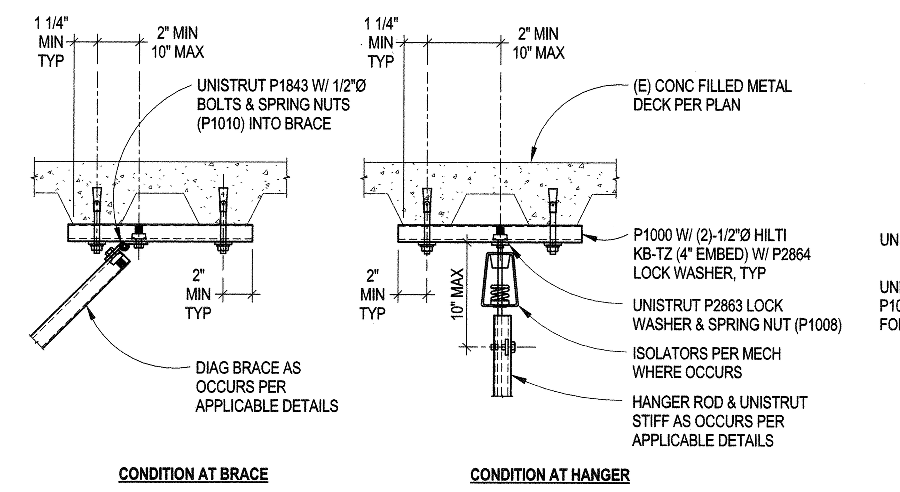

HANGER ROD
& BRACE TO CONCRETE FILLED METAL DECK 7/S7.20
SCALE: 1" = 1'-0"

NOTES:
1. PROVIDE TRANSVERSE BRACE AT 10'-0"OC AND 2'-0" MAXIMUM FROM EACH TURN.
2. PROVIDE (2)-LONGITUDINAL BRACES AT 20'-0"OC AND 2'-0" MAXIMUM FROM EACH TURN.

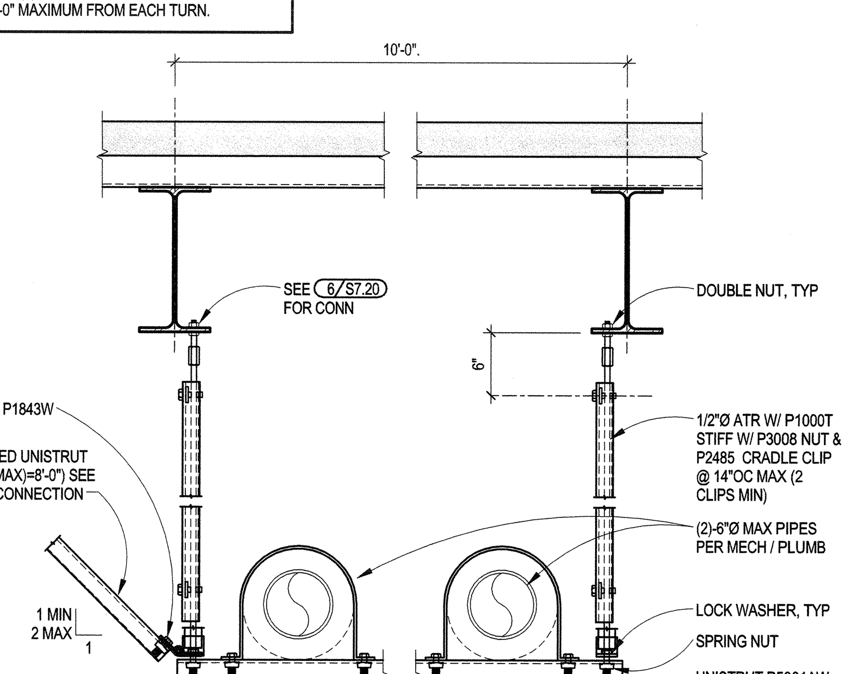

PIPE SUPPORT AT TRAPEZE AT METAL DECK 3/S7.20
SCALE: 1" = 1'-0"

HPI architecture
www.hpiarchitecture.com
115 22nd street
Newport Beach, CA 92663
o: 949. 675. 6442

CONSULTANTS
MHP STRUCTURAL ENGINEERS
3900 Cover Street
Long Beach, CA 90808
562.985.3200 P
562.985.1011 F
MHP JN 14-0451-00

AUG 16 2018

SEALS / APPROVALS

IDENTIFICATION STAMP
DIV. OF THE STATE ARCHITECT
FILE: 30-C2
A# 04-116810
AC — FLS — SS TY
DATE AUG 3 1 2018

PROJECT TITLE
JOHNSON STUDENT CENTER
INCREMENT 2
1530 W 17TH ST SANTA ANA CA 92706

RANCHO SANTIAGO Community College District

SUBMITTALS		
#	DATE	DESCRIPTION
	08/13/2018	DSA FINAL SUBMITTAL

PROJECT IDENTIFICATION Project Number
THESE DRAWINGS ORIGINALLY CREATED IN AUTODESK REVIT V. 2016 U.O.N.
THE ORIGINAL SIZE OF THIS SHEET IS 30" X 42".

DRAWN BY JA / SMA / AM

CHECKED BY DCF

THESE DRAWINGS AND SPECIFICATIONS ARE THE PROPERTY AND COPYRIGHT OF THE ARCHITECT AND SHALL NOT BE USED ON ANY OTHER PROJECT OR LOCATIONS EXCEPT AS DESCRIBED ON THE DRAWINGS, WITHOUT WRITTEN AGREEMENT WITH THE ARCHITECT.
© HILL PARTNERSHIP INC. 2017

SHEET TITLE
EQUIPMENT ANCHORAGE SECTIONS AND DETAILS

SHEET NUMBER
S7.20

DSA FINAL SUBMITTAL

8/16/2018 8:44:00 PM D:\Revit Local Files\14-0451-00_SA College Johnson Center_R18_Shuc_jarcilagu.rvt

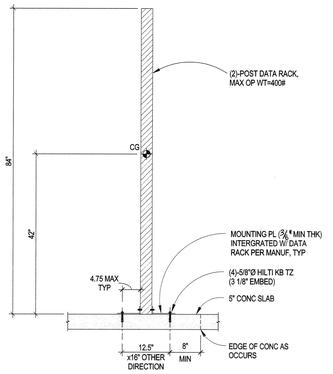

2 POST DATA RACK ANCHORAGE TO CONC SLAB

SCALE: 3/4" = 1'-0"

1 / S7.30

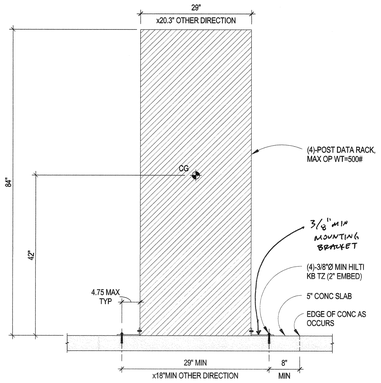

4 POST DATA RACK ANCHORAGE TO CONC SLAB

SCALE: 3/4" = 1'-0"

2 / S7.30

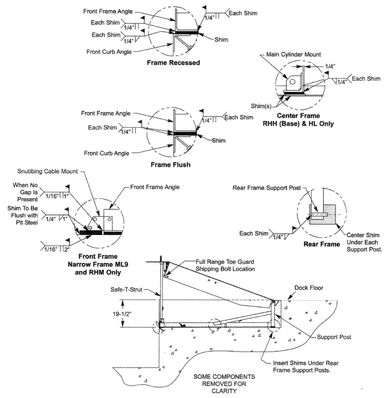

LOADING DOCK LEVELER

SCALE: NONE

3 / S7.30

HPI architecture

www.hpiarchitecture.com

115 22nd street
Newport Beach, CA 92663

o: 949. 675. 6442

CONSULTANTS

MHP STRUCTURAL ENGINEERS
3900 Cover Street
Long Beach, CA 90808
562.985.3200 P
562.985.1011 F
MHP JN 14-0451-00

AUG 16 2018

SEALS / APPROVALS

IDENTIFICATION STAMP
DIV. OF THE STATE ARCHITECT
FILE: 30-C2
A# 04-116810
AC — FLS — SS Ty
DATE AUG 31 2018

PROJECT TITLE

JOHNSON STUDENT CENTER

INCREMENT 2

1530 W 17TH ST SANTA ANA CA 92706

RANCHO SANTIAGO Community College District

SUBMITTALS		
#	DATE	DESCRIPTION
	08/13/2018	DSA FINAL SUBMITTAL

PROJECT IDENTIFICATION Project Number

THESE DRAWINGS ORIGINALLY CREATED IN AUTODESK REVIT V. 2016 U.O.N.

THE ORIGINAL SIZE OF THIS SHEET IS 30" X 42".

DRAWN BY JA / SMA / AM

CHECKED BY DCF

THESE DRAWINGS AND SPECIFICATIONS ARE THE PROPERTY AND COPYRIGHT OF THE ARCHITECT AND SHALL NOT BE USED ON ANY OTHER PROJECT OR LOCATIONS EXCEPT AS DESCRIBED ON THE DRAWINGS, WITHOUT WRITTEN AGREEMENT WITH THE ARCHITECT.

© HILL PARTNERSHIP INC. 2017

SHEET TITLE

EQUIPMENT ANCHORAGE SECTIONS AND DETAILS

SHEET NUMBER

S7.30

DSA FINAL SUBMITTAL

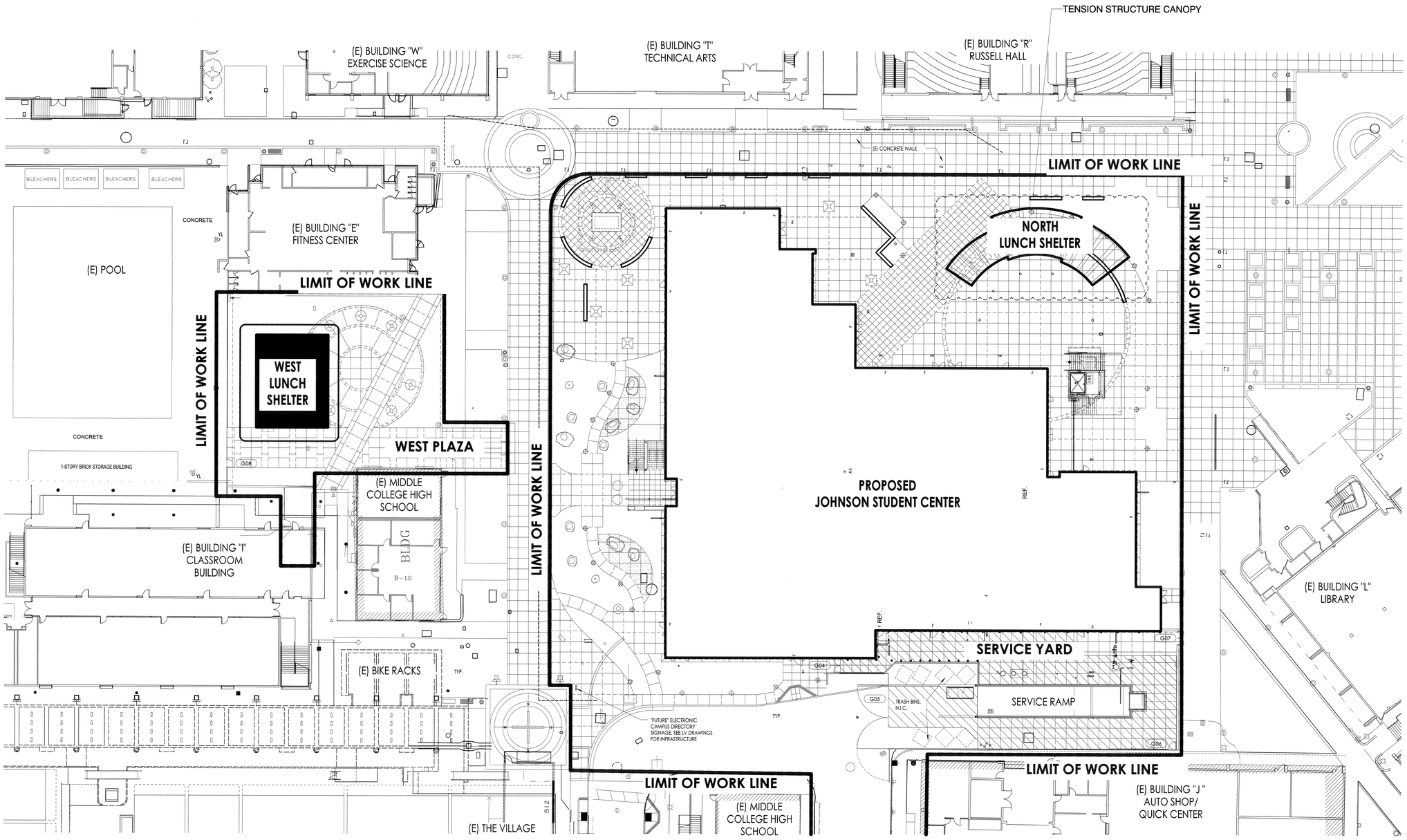

SITE PLAN - NORTH SCALE 1" = 20'-0" 1

100% CONSTRUCTION DOCUMENTS

HPI architecture
www.hpiarchitecture.com
115 22nd street
Newport Beach, CA 9266
o: 949. 675. 6442

CONSULTANTS

EIDE INDUSTRIES, INC.
16215 PIUMA AVENUE
CERRITOS, CA 90703
PHONE (562) 402-8335
FAX (562) 924-2233
www.eideindustries.com
TENSION Structures.com
Division of Eide Industries, Inc.
039169

REGISTERED PROFESSIONAL ENGINEER JOHN PEARCE HILL No. 39169 Exp. 12-31-19 STRUCTURAL STATE OF CALIFORNIA

AUG 16 2018

SEALS / APPROVALS

IDENTIFICATION STAMP
DIV. OF THE STATE ARCHITECT
FILE: 30-C2
A# 0 4 - 116810
AC — FLS — SS TJ
DATE AUG 3 1 2018

PROJECT TITLE

JOHNSON STUDENT CENTER

1530 W 17TH ST SANTA ANA CA 92706

RANCHO SANTIAGO
Community College District

SUBMITTALS

#	DATE	DESCRIPTION
	08/13/2018	DSA FINAL SUBMITTAL

PROJECT IDENTIFICATION Project Number

THESE DRAWINGS ORIGINALLY CREATED IN AUTODESK REVIT V. 2016 U.0

THE ORIGINAL SIZE OF THIS SHEET IS 30" X 42".

DRAWN BY AD

CHECKED BY

THESE DRAWINGS AND SPECIFICATIONS ARE THE PROPERTY AND COPYRIGHT OF THE ARCHITECT AND SHALL NOT BE USED ON ANY OTHER PROJECT OR LOCATIONS EXCEPT AS DESCRIBED ON THE DRAWINGS, WITHOUT WRITTEN AGREEMENT WITH THE ARCHITECT.

© HILL PARTNERSHIP INC. 2016

SHEET TITLE

TENSION STRUCTURE CANOPY SITE PLAN

SHEET NUMBER

SS1.01

9/6/2017 10:17:37 AM C:\My Documents\RSCCD_SAC_Johnson Center_Central_R16_mstuart.rvt

9/6/2017 10:17:37 AM G:\My Documents\RSCCD_SAC_Johnson Center_Central_R16_mstuart.rvt

Basis for Design

1.1 BUILDING CODE: 2016 California Building Code

1.2 GRAVITY DESIGN:

ROOF LOADING

DEAD LOAD (PSF)	Self weight
LIVE LOAD (PSF)	10 min. psf (Fabric construction)

1.3 LATERAL DESIGN:

WIND LOADING

Basic Wind Speed (3s - Gust)	115 MPH
Exposure Category	C

SEISMIC LOADING

Occupancy Category	III
Ss, S1	1.457, 0.534
Sds, Sd1	0.971, 0.534
Soil Site Class	D
Seismic Design Category	D
R	1.25
Omega	1.25
Cd	1.25
I	1.25
Lateral Force Resisting System	Cantilevered column system

detailed to conform the requirements for ordinary steel moment frames.

Analysis Procedure ASCE7-10 Chapter 27

2.1 FOUNDATION DESIGN:

FOUNDATION DESIGNED IN CONFORMANCE WITH RECOMMENDATIONS FROM SOIL REPORT FROM TERRACON CONSULTANTS,INC, PROJECT NO. 60145100 DATED OCTOBER 14, 2016.
PER SOIL REPORT THE ALLOWABLE PASSIVE EARTH PRESSURE 180 PSF PER FOOT OF DEPTH, THE MAXIMUM PASSIVE PRESSURE 1800 PSF AND THE ALLOWABLE SKIN FRICTION 60 PSF WERE USED FOR PIER FOOTING DESIGN. ALLOWABLE SOIL VALUES ARE ALREADY PRESENTED ON THIS SECTION.

3.1 CONCRETE AND REINFORCING DESIGN:

CONCRETE: FOOTINGS AND SLABS ON GRADE f'c 3000 PSI. REBAR ASTM A615 GRADE 60 (FY = 60 KSI).

4.1 STRUCTURAL STEEL

STRUCTURAL STEEL MEMBERS SHALL CONFORM WITH THE FOLLOWING STANDARDS AND MATERIAL PROPERTIES:

SHAPE	STANDARD	YIELD (Fy)
ROLLED WIDE FLANGE SECTIONS	ASTM A992/572	50
OTHER STANDARD STEEL SHAPES AND ROLLED SECTIONS	ASTM 36	36
BARS AND PLATES	ASTM 36	36
THREADED ROD, EPOXY BOLTS, STUDS AND BOLTS IN WOOD CONNECTIONS	ASTM A-307	---
STAINLESS STEEL BOLTS	ASTM F593	....
HIGH STRENGTH BOLTS GALV.	ASTM A325 TYPE 1	---
TUBES	ASTM A500 GR B	46
	ASTM A500 GR B	42

STRUCTURAL OBSERVATION:

1. THE STRUCTURAL ENGINEER OF RECORD (SEOR), OR HIS/HER DESIGNATED ENGINEER, SHALL PROVIDE VISUAL STRUCTURAL OBSERVATION OF THE STRUCTURAL SYSTEM FOR GENERAL CONFORMANCE TO THE APPROVED CONSTRUCTION DOCUMENTS AND SPECIFICATIONS AT SIGNIFICANT CONSTRUCTION STAGES AND AT COMPLETION OF THE STRUCTURAL SYSTEM, AS REQUIRED BY CBC SECTION 1709A AND AS DEFINED IN CBC SECTION 1702A. WRITTEN REPORTS SHALL BE SUBMITTED TO THE OWNER'S REPRESENTATIVE OR HIS DESIGNEE FOR DISTRIBUTION TO THE SPECIAL INSPECTOR, CONTRACTOR AND BUILDING OFFICIAL.

2. THE STRUCTURAL OBSERVER SHALL SUBMIT A WRITTEN STATEMENT TO THE GOVERNING AGENCY THAT THE SITE VISITS HAVE BEEN MADE. SUCH REPORTS SHALL IDENTIFY ANY OBSERVED DEFICIENCIES, WHICH TO THE BEST OF THE STRUCTURAL OBSERVER'S KNOWLEDGE HAVE NOT BEEN RESOLVED. AT THE COMPLETION OF THE STRUCTURAL SYSTEM THE STRUCTURAL OBSERVER SHALL PROVIDE A FINAL OBSERVATION REPORT INDICATING THAT TO THE BEST OF HIS/HER KNOWLEDGE ALL OBSERVED DEFICIENCIES HAVE BEEN RESOLVED AND THE STRUCTURAL SYSTEM GENERALLY CONFORMS TO THE APPROVED PLANS AND SPECIFICATIONS.

3. STRUCTURAL OBSERVATION DOES NOT INCLUDE OR WAIVE THE RESPONSIBILITY OF THE INSPECTIONS BY THE BUILDING OFFICIAL AS REQUIRED BY CBC SECTION 109, SPECIAL INSPECTIONS REQUIRED BY CBC SECTION 1704A, OR ANY OTHER INSPECTION REQUIRED BY OTHER SECTIONS OF THE CODE OR AS NOTED ELSEWHERE IN THE CONTRACT DOCUMENTS. THE STRUCTURAL OBSERVER DOES NOT HAVE THE AUTHORITY TO APPROVE COVERING OF CONSTRUCTION AND HIS/HER POSITIVE DISPOSITION OF THE OBSERVATION REPORT DOES NOT WARRANT THAT THE CONSTRUCTION WILL PASS THE BUILDING OFFICIAL'S INSPECTION.

4. STRUCTURAL OBSERVATION FOR THIS PROJECT SHALL BE PROVIDED BY MHP STRUCTURAL ENGINEERS, INC.; 3900 COVER STREET, LONG BEACH, CALIFORNIA, 90808; TELEPHONE (562) 985-3200; FAX (562) 985-1011.

5. THE CONTRACTOR SHALL BE RESPONSIBLE FOR THE CONSTRUCTION SCHEDULE AND SHALL NOTIFY THE STRUCTURAL OBSERVER NO LESS THAN THREE (3) BUSINESS DAYS IN ADVANCE OF REQUIRED OBSERVATIONS. FAILURE OF THE CONTRACTOR TO PROVIDE ADEQUATE NOTIFICATION MAY RESULT IN DELAYS DUE TO CORRECTIVE WORK OR REMOVAL OF SUBSEQUENT WORK TO ALLOW ADEQUATE OBSERVATION. REMOVAL AND REPLACEMENT OF ANY FINISHED WORK AND/OR FRAMING DAMAGED BY THE REMOVAL PROCESS OR AS REQUIRED FOR CORRECTIVE ACTION RESULTING FROM INADEQUATE NOTIFICATION SHALL BE AT THE CONTRACTOR'S EXPENSE.

6. THE STRUCTURAL OBSERVER SHALL AS A MINIMUM PERFORM STRUCTURAL OBSERVATION AT THE FOLLOWING STAGES OF CONSTRUCTION (CONSTRUCTION STAGES AND ELEMENTS/CONNECTIONS TO BE OBSERVED):

   A. CONCRETE & REINFORCING STEEL
   AFTER EXCAVATION OR FORMING AND PLACEMENT OF REINFORCING STEEL, PRIOR TO CLOSING FORMS AND PLACEMENT OF CONCRETE, FOR FIRST SIGNIFICANT POUR OF STRUCTURAL WORK.

   B. STEEL FRAMING
   FOLLOWING ERECTION AND COMPLETION OF REPRESENTATIVE SAMPLING OF CONNECTIONS (INCLUDING GUSSET PLATES AND BRACES), PRIOR TO COVERING CONNECTIONS.

   C. COMPLETION OF STRUCTURAL SYSTEM

SPECIAL INSPECTIONS:

1. THE OWNER, OR THE OWNER'S AUTHORIZED AGENT (OTHER THAN THE CONTRACTOR AS APPLICABLE) SHALL EMPLOY ONE OR MORE SPECIAL INSPECTORS, INCLUDING AS APPLICABLE AN INSPECTOR OF RECORD (IOR), WHO SHALL PROVIDE SPECIAL INSPECTIONS DURING CONSTRUCTION FOR CERTAIN TYPES OF WORK WHEN SO SPECIFIED IN THE CONTRACT DOCUMENTS AND PROJECT SPECIFICATIONS. WHERE AN IOR IS REQUIRED BY THE GOVERNING AGENCY, THE IOR MAY PERFORM SPECIAL INSPECTIONS IF THAT PERSON IS QUALIFIED PER THE GOVERNING AGENCY'S STANDARDS FOR THE SPECIAL INSPECTION REQUIRED. WHERE AN IOR IS NOT REQUIRED, THESE SPECIAL INSPECTIONS SHALL BE IN ADDITION TO AND COMPLEMENTARY WITH THE INSPECTIONS PROVIDED BY THE GOVERNING AGENCY.

2. THE SPECIAL INSPECTOR SHALL BE A QUALIFIED PERSON FROM AN APPROVED AGENCY CONFORMING TO ASTM C1077 WHO SHALL DEMONSTRATE COMPETENCE, TO THE SATISFACTION OF THE ARCHITECT, STRUCTURAL ENGINEER OF RECORD AND THE GOVERNING AGENCY, FOR INSPECTION OF THE PARTICULAR TYPE OF CONSTRUCTION OR OPERATION REQUIRING SPECIAL INSPECTION.

3. THE SPECIAL INSPECTOR SHALL OBSERVE THE WORK ASSIGNED FOR CONFORMANCE WITH THE DESIGN DRAWINGS, SPECIFICATIONS AND APPLICABLE WORKMANSHIP PROVISIONS OF THE CODE AND OTHER APPLICABLE REGULATIONS IDENTIFIED WITHIN THE CONSTRUCTION DOCUMENTS. ALL DISCREPANCIES SHALL BE BROUGHT TO THE IMMEDIATE ATTENTION OF THE GENERAL CONTRACTOR FOR CORRECTION AND THEN, IF UNCORRECTED, TO THE ATTENTION OF THE ARCHITECT, STRUCTURAL ENGINEER OF RECORD AND THE GOVERNING AGENCY. IT SHALL BE THE GENERAL CONTRACTOR'S RESPONSIBILITY TO COORDINATE WITH THE SPECIAL INSPECTOR AND SCHEDULE THE SPECIAL INSPECTIONS WITH ADEQUATE TIME TO ADDRESS ANY AND ALL POTENTIAL DISCREPANCIES PRIOR TO PROCEEDING WITH SUBSEQUENT WORK THAT COVERS OR OTHERWISE MAKES INACCESSIBLE ANY WORK IDENTIFIED AS DEVIATING FROM THE PROJECT REQUIREMENTS.

4. THE SPECIAL INSPECTOR SHALL FURNISH REGULAR INSPECTION REPORTS TO THE ARCHITECT, STRUCTURAL ENGINEER OF RECORD AND THE GOVERNING AGENCY IDENTIFYING THE WORK INSPECTED AND ANY UNCORRECTED DISCREPANCIES FROM THE CONSTRUCTION DOCUMENTS. AT THE CONCLUSION OF THE PROJECT OR THE SPECIAL INSPECTORS ASSIGNED SCOPE OF WORK, THE SPECIAL INSPECTOR SHALL SUBMIT A FINAL SIGNED REPORT STATING WHETHER THE WORK REQUIRING SPECIAL INSPECTION WAS, TO THE BEST OF HIS OR HER KNOWLEDGE, COMPLETED IN CONFORMANCE WITH THE CONSTRUCTION DOCUMENTS AND SPECIFICATIONS (INCLUDING APPROVED RFI'S, ADDENDUMS, ETC.) AND THE APPLICABLE WORKMANSHIP PROVISIONS OF THE CODE AND OTHER APPLICABLE REGULATIONS IDENTIFIED WITHIN THE CONSTRUCTION DOCUMENTS.

5. SPECIAL INSPECTIONS INDICATED BELOW SHALL BE PROVIDED IN EITHER A CONTINUOUS OR PERIODIC CAPACITY, AS DEFINED BELOW, AS REQUIRED BY THE INDIVIDUAL CODE OR REFERENCED STANDARD.

6. CONTINUOUS - SPECIAL INSPECTION BY THE SPECIAL INSPECTOR WHO IS PRESENT WHEN AND WHERE THE WORK TO BE INSPECTED IS BEING PERFORMED. FOR STRUCTURAL STEEL, CONTINUOUS INSPECTION IS FURTHER DEFINED SUCH THAT INSPECTION SHALL TAKE PLACE ON EACH ELEMENT TO BE INSPECTED (I.E. EACH BOLT OR WELD).

7. PERIODIC - SPECIAL INSPECTION BY THE SPECIAL INSPECTOR WHO IS INTERMITTENTLY PRESENT WHERE THE WORK TO BE INSPECTED HAS BEEN OR IS BEING PERFORMED. FOR STRUCTURAL STEEL, PERIODIC INSPECTION IS FURTHER DEFINED SUCH THAT ITEMS ARE OBSERVED ON A RANDOM BASIS.

8. SEE APPROVED DSA FORM-103, STATEMENT OF STRUCTURAL TEST & SPECIAL INSPECTIONS FOR INSPECTION AND TESTING REQUIREMENTS. NOTES BELOW COMPLEMENT OR ARE IN ADDITION TO THE DSA FORM-103 REQUIREMENTS:

CONCRETE SPECIAL INSPECTION AND TESTING NOTES:

1. SPECIFIC REQUIREMENTS FOR SPECIAL INSPECTION ARE INCLUDED IN THE RESEARCH REPORT FOR EACH POST-INSTALLED ANCHOR ISSUED BY AN APPROVED SOURCE. THESE SPECIAL INSPECTION REQUIREMENTS SHOULD BE FOLLOWED. WHERE SPECIFIC REQUIREMENTS ARE NOT PROVIDED, CONTACT STRUCTURAL ENGINEER FOR SPECIAL INSPECTION REQUIREMENTS PRIOR TO PROCEEDING WITH THE WORK. PROJECT SPECIFIC SPECIAL INSPECTION MEASURES SHALL BE APPROVED BY THE GOVERNING AGENCY PRIOR TO THE COMMENCEMENT OF THE WORK. THE INSTALLATION OF ADHESIVE ANCHORS IN HORIZONTAL AND UPWARDLY INCLINED POSITIONS SHALL BE PERFORMED BY AN ACI/CRSI CERTIFIED ADHESIVE ANCHOR INSTALLER. SEE POST INSTALLED CONCRETE AND MASONRY ANCHOR SPECIAL INSPECTION NOTES BELOW FOR MORE INFORMATION.

2. A STRENGTH TEST SHALL BE THE AVERAGE OF, AT A MINIMUM, TWO 6x12 CYLINDERS OR THREE 4x8 CYLINDERS MADE FROM THE SAME SAMPLE OF CONCRETE. A TESTING LABORATORY SHALL MAKE AND TEST ONE SAMPLE SET FOR EACH 50 CUBIC YARDS OF CONCRETE BUT NOT LESS THAN ONE SAMPLE SET FOR EACH 2,000 SQFT OF SURFACE AREA FOR SLABS OR WALLS. IF TOTAL VOLUME OF CONCRETE IS SUCH THAT FREQUENCY OF TESTING WOULD PRODUCE FEWER THAN 5 STRENGTH TESTS FOR A GIVEN CONCRETE MIXTURE, THEN STRENGTH TEST SPECIMENS SHALL BE MADE FROM AT LEAST 5 RANDOMLY SELECTED BATCHES OR FROM EACH BATCH IF FEWER THAN 5 BATCHES ARE USED. AN ADDITIONAL SAMPLE FOR SEVEN-DAY COMPRESSIVE STRENGTH TESTS SHALL BE TAKEN FOR EACH CLASS OF CONCRETE AT THE BEGINNING OF CONCRETE WORK OR WHENEVER THE MIX OR AGGREGATE IS CHANGED.

3. CONTINUOUS INSPECTION IS REQUIRED AT THE BATCH PLANT WHERE THE MATERIALS ARE MEASURED. CONTINUOUS INSPECTION MAY BE WAIVED IF APPROVED BY THE SEOR AND THE GOVERNING AGENCY, IF THE PLANT COMPLIES FULLY WITH ASTM C94, SECTIONS 9 AND 10, AND HAS CURRENT CERTIFICATION FROM THE NATIONAL READY MIXED CONCRETE ASSOCIATION OR OTHER AGENCY ACCEPTABLE TO THE GOVERNING AGENCY. WHEN CONTINUOUS INSPECTION IS WAIVED, THE FOLLOWING INSPECTIONS SHALL BE PERFORMED:
   A. INSPECT THE FIRST BATCH AT THE START OF THE DAY TO VERIFY MATERIALS AND PROPORTIONS CONFORM TO THE APPROVED MIX DESIGN.
   B. A LICENSED WEIGHMASTER SHALL POSITIVELY IDENTIFY QUANTITY OF MATERIALS AND CERTIFY EACH LOAD BY A BATCH TICKET.
   C. BATCH TICKETS, INCLUDING MATERIAL QUANTITIES AND WEIGHTS SHALL ACCOMPANY THE LOAD, SHALL BE TRANSMITTED TO THE IOR BY THE TRUCK DRIVER WITH LOAD IDENTIFIED THEREON. THE LOAD SHALL NOT BE PLACED WITHOUT A BATCH TICKET IDENTIFYING EACH TRUCK, ITS LOAD, AND TIME OF RECEIPT AT THE JOBSITE, AND APPROXIMATE LOCATION OF DEPOSIT IN THE STRUCTURE AND SHALL MAINTAIN A COPY OF THE DAILY RECORD AS REQUIRED BY THE GOVERNING AGENCY.

STEEL SPECIAL INSPECTION AND TESTING NOTES:

1. THE FABRICATOR OR ERECTOR, AS APPLICABLE, SHALL MAINTAIN A SYSTEM BY WHICH A WELDER WHO HAS WELDED A JOINT OR MEMBER CAN BE IDENTIFIED. STAMPS, IF USED, SHALL BE THE LOW-STRESS TYPE.

2. WHEN WELDING OF DOUBLER PLATES, CONTINUITY PLATES OR STIFFENERS HAS BEEN PERFORMED IN THE K-AREA, VISUALLY INSPECT THE WEB K-AREA FOR CRACKS WITHIN 3" (75MM) OF THE WELD.

3. WHERE CJP GROOVE WELDS OCCUR IN ELEMENTS AND CONNECTIONS THAT ARE NOT PART OF THE SEISMIC FORCE-RESISTING SYSTEM (SFRS) , IN RISK CATEGORY III AND IV (SEE GENERAL NOTES), ULTRASONIC TESTING (UT) SHALL BE PERFORMED ON ALL CJP GROOVE WELDS IN MATERIALS 5/16 INCH AND THICKER. IN RISK CATEGORY II, UT SHALL BE PERFORMED ON 10% OF CJP GROOVE WELDS IN MATERIAL 5/16 INCH AND THICKER.

4. AT SEISMIC FORCE-RESISTING SYSTEM (SFRS) ELEMENTS AND CONNECTIONS, THE FOLLOWING INSPECTIONS SHALL BE PERFORMED:
   A. VERIFY REDUCED BEAM SECTION (RBS) REQUIREMENTS INCLUDING CONTOUR AND FINISH, DIMENSIONAL TOLERANCES, AND DOCUMENT ACCEPTANCE.
   B. VERIFY THERE ARE NO HOLES OR UNAPPROVED ATTACHMENTS MADE BY FABRICATOR OR ERECTOR WITHIN THE PROTECTED ZONE OF THE FRAME, AND DOCUMENT ACCEPTANCE.

5. IN ADDITION TO SPECIAL INSPECTIONS REQUIRED BY NOTES AND TABLES ABOVE, THE FOLLOWING NON-DESTRUCTIVE TESTING OF WELDED JOINTS SHALL BE PERFORMED IN ACCORDANCE WITH AWS D1.1/D1.1M ON SEISMIC RESISTING ELEMENTS:
   A. K-AREA NDT
   WHERE WELDING OF DOUBLER, CONTINUITY OR STIFFENER PATES HAS BEEN PERFORMED IN THE K-AREA, THE WEB SHALL BE TESTED FOR CRACKS USING MAGNETIC PARTICLE TESTING (MT). THE MT INSPECTION AREA SHALL INCLUDE THE K-AREA BASE METAL WITHIN 3" OF THE WELD. THE MT SHALL BE PERFORMED NO SOONER THAN 48 HOURS FOLLOWING COMPLETION OF THE WELDING.

   B. CJP GROOVE WELD NDT
   ULTRASONIC TESTING (UT) SHALL BE PERFORMED ON 100% OF CJP GROOVE WELDS IN MATERIALS 5/16" AND GREATER IN THICKNESS. WELD DISCONTINUITIES SHALL BE ACCEPTED OR REJECTED ON THE BASIS OF CRITERIA OF AWS D1.1/D1.1M TABLE 6.2. MT SHALL BE PERFORMED ON 25% OF ALL BEAM-TO-COLUMN CJP GROOVE WELDS

   C. BASE METAL NDT FOR LAMELLAR TEARING AND LAMINATIONS
   AFTER JOINT COMPLETION, BASE METAL THICKER THAN 1 1/2" LOADED IN TENSION IN THE THROUGH-THICKNESS DIRECTION IN TEE AND CORNER JOINTS, WHERE THE CONNECTED MATERIAL IS GREATER THAN 3/4" AND CONTAINS CJP GROOVE WELDS, SHALL BE ULTRASONICALLY TESTED FOR DISCONTINUITIES BEHIND AND ADJACENT TO THE FUSION LINE OF SUCH WELDS. ANY BASE METAL DISCONTINUITIES FOUND WITHIN T/4 OF THE STEEL SURFACE SHALL BE ACCEPTED OR REJECTED ON THE BASIS OF CRITERIA OF AWS D1.1/D1.1M TABLE 6.2, WHERE T IS THE THICKNESS OF THE PART SUBJECTED TO THE THROUGH-THICKNESS STRAIN.

   D. BEAM COPE AND ACCESS HOLE NDT
   AT WELDED SPLICES AND CONNECTIONS, THERMALLY CUT SURFACES OF BEAM COPES AND ACCESS HOLES SHALL BE TESTED USING MAGNETIC PARTICLE OR PENETRANT TESTING, WHEN THE FLANGE THICKNESS EXCEEDS 1 1/2" FOR ROLLED SHAPES, OR WHEN THE WEB THICKNESS EXCEEDS 1 1/2" FOR BUILT-UP SHAPES.

   E. WELD TAB REMOVAL SITES
   AT THE END OF WELDS WHERE WELD TABS HAVE BEEN REMOVED, MT SHALL BE PERFORMED ON THE SAME BEAM-TO-COLUMN JOINTS RECEIVING UT REQUIRED IN B ABOVE.

WIND-RESISTING COMPONENTS, ALL MATERIALS, SPECIAL INSPECTION NOTES:

1. PERIODIC SPECIAL INSPECTION IS REQUIRED FOR FASTENING OF ROOF COVERING, ROOF DECK AND ROOF FRAMING CONNECTIONS.

2. periodic special inspection is required for fastening of EXTERIOR WALL COVERING, AND WALL CONNECTIONS TO ROOF AND FLOOR DIAPHRAGMS AND FRAMING.

ABBREVIATIONS:

CODES/INSTITUTIONS/ASSOCIATIONS

ACI	AMERICAN CONCRETE INSTITUTE
AF&PA	(NDS) AMERICAN FOREST & PAPER ASSOCIATION (NDS)
AISC	AMERICAN INSTITUTE OF STEEL CONSTRUCTION
AISI	AMERICAN IRON AND STEEL INSTITUTE
ASCE	AMERICAN SOCIETY OF CIVIL ENGINEERS
ASTM	AMERICAN SOCIETY FOR TESTING AND MATERIALS
AWS	AMERICAN WELDING SOCIETY
CBC	CALIFORNIA BUILDING CODE
CRSI	CONCRETE REINFORCING STEEL INSTITUTE
DSA	DIVISION OF THE STATE ARCHITECT
IBC	INTERNATIONAL BUILDING CODE

SYMBOLS

#	POUND, NUMBER, QUANTITY
@	AT
<	LESS THAN
>	GREATER THAN
±	PLUS OR MINUS
°	DEGREE
Ø	DIAMETER

ABBREVIATIONS

AB	ANCHOR BOLT
ADDL	ADDITIONAL
ANCH	ANCHOR, ANCHORAGE
APPROX	APPROXIMATE, APPROXIMATELY
ARCH	ARCHITECT, ARCHITECTURAL
BLDG	BUILDING
BM	BEAM
BOT	BOTTOM
CALCS	CALCULATIONS
CANT	CANTILEVER
CG	CENTER OF GRAVITY
CIP	CAST IN PLACE
CL	CENTERLINE
CLR	CLEAR, CLEARANCE
COL	COLUMN
CONC	CONCRETE
CONN	CONNECT, CONNECTION
CONT	CONTINUOUS
CJP	COMPLETE JOINT PENETRATION
CP	CONCRETE PIER
d	PENNY (NAIL SIZE)
DBL	DOUBLE
DET	DETAIL
DIA	DIAMETER
DIAG	DIAGONAL
DIM	DIMENSION
DIST	DISTANCE
DO	DITTO
DWG	DRAWING
(E)	EXISTING
EA	EACH
EF	EACH FACE
ELEC	ELECTRICAL
ELEV	ELEVATION, ELEVATOR
EMB	EMBED, EMBEDDED, EMBEDMENT
EMBED	EMBED, EMBEDDED, EMBEDMENT
EN	EDGE NAIL
EQ	EQUAL
EQUIP	EQUIPMENT
ES	EDGE SCREW, EACH SIDE
EW	EACH WAY
FDN	FOUNDATION
FIN	FINISH
FLR	FLOOR
FN	FIELD NAIL
F/O	FACE OF
FTG	FOOTING
GA	GAUGE
GALV	GALVANIZE
GR	GRADE
HEX	HEXAGONAL
HT	HEIGHT
HORIZ	HORIZONTAL
I/F	INSIDE FACE
INFO	INFORMATION
INSP	INSPECTION
JST	JOIST
K	KIPS (1000#)
KB3	HILTI KWIK BOLT 3 (ANCHOR)
KB-TZ	HILTI KWIK BOLT TZ (ANCHOR)
LBS	POUNDS
ld	DEVELOPMENT LENGTH
ldh	HOOK DEVELOPMENT LENGTH
LLH	LONG LEG HORIZONTAL
LLV	LONG LEG VERTICAL
LOCS	LOCATIONS
LONG	LONGITUDINAL
ls	LAP SPLICE LENGTH
LTWT	LIGHT-WEIGHT
LWT	LIGHT-WEIGHT
MANUF	MANUFACTURER
MAX	MAXIMUM
MECH	MECHANICAL
MFR	MANUFACTURER
MHP	MHP STRUCTURAL ENGINEERS
MIN	MINIMUM
MISC	MISCELLANEOUS
(N)	NEW
N/A	NOT APPLICABLE
NTS	NOT TO SCALE
NWT	NORMAL-WEIGHT
O/F	OUTSIDE FACE
OC	ON CENTER
OH	OPPOSITE HAND
OP	OPERATING
OPER	OPERATING
OPP	OPPOSITE, OPPOSITE HAND
PARA	PARALLEL
PERP	PERPENDICULAR
PL	PLATE, PROPERTY LINE
PJP	PARTIAL JOINT PENETRATION
QTY	QUANTITY
R	RADIUS
RAD	RADIUS
REF	REFER TO, REFERENCE
REINF	REINFORCING
REQD	REQUIRE, REQUIRED
SCHED	SCHEDULE
SECT	SECTION
SEOR	STRUCTURAL ENGINEER OF RECORD
SHT	SHEET
SHTG	SHEATHING
SIM	SIMILAR
SIMP	SIMPSON STRONG-TIE COMPANY
SMS	SHEET METAL SCREW
SOG	SLAB-ON-GRADE
SQ	SQUARE
STAGG	STAGGER
STD	STANDARD
STIFF	STIFFEN, STIFFENER
STIRR	STIRRUP
STRUC	STRUCTURAL
SYM	SYMMETRICAL
T&B	TOP & BOTTOM
TBD	TO BE DETERMINED
THK	THICK, THICKNESS
THRU	THROUGH
T/O	TOP OF
TRANS	TRANSVERSE
TS	TUBE STEEL
TYP	TYPICAL
UNO	UNLESS NOTED OTHERWISE
VERT	VERTICAL
VIF	VERIFY IN FIELD
W/	WITH
W/O	WITHOUT
WP	WORK POINT
WT	WEIGHT

HPI architecture
www.hpiarchitecture.com
115 22nd street
Newport Beach, CA 9266
o: 949. 675. 6442

CONSULTANTS

EIDE INDUSTRIES, INC.
16215 PIUMA AVENUE
CERRITOS, CA 90703
PHONE (562) 402-8335
FAX (562) 924-2233
www.eideindustries.com

TENSION Structures.com
Division of Eide Industries, Inc.

039169

REGISTERED PROFESSIONAL ENGINEER TERRY FERNANDEZ No. 3256 Exp. 6-31-19 STRUCTURAL STATE OF CALIFORNIA

AUG 16 2018

SEALS / APPROVALS

LICENSED ARCHITECT LAWRENCE ... NO. C 11380 Ren. 6-30-19 STATE OF CALIFORNIA

IDENTIFICATION STAMP
DIV. OF THE STATE ARCHITECT
FILE: 30-C2
A# 0 4 - 116810
AC — FLS — SS TY
DATE AUG 3 1 2018

PROJECT TITLE

JOHNSON STUDENT CENTER

1530 W 17TH ST SANTA ANA CA 92706

RANCHO SANTIAGO Community College District

SUBMITTALS		
#	DATE	DESCRIPTION
	08/13/2018	DSA FINAL SUBMITTAL

PROJECT IDENTIFICATION Project Number

THESE DRAWINGS ORIGINALLY CREATED IN AUTODESK REVIT V. 2016 U.

THE ORIGINAL SIZE OF THIS SHEET IS 30" X 42".

DRAWN BY AD

CHECKED BY

THESE DRAWINGS AND SPECIFICATIONS ARE THE PROPERTY AND COPYRIGHT OF THE ARCHITECT AND SHALL NOT BE USED ON ANY OTHER PROJECT OR LOCATIONS EXCEPT AS DESCRIBED ON THE DRAWINGS, WITHOUT WRITTEN AGREEMENT WITH THE ARCHITECT.

© HILL PARTNERSHIP INC. 2016

SHEET TITLE

GENERAL NOTES

SHEET NUMBER

SS1.02

100% CONSTRUCTION DOCUMENTS

J:\Drawings\Tension Structures Dec. 2014\Customers\HPI Architecture 039169\039169-7.dwg, 8/15/2018 1:37:10 PM, DWG To PDF.pc3

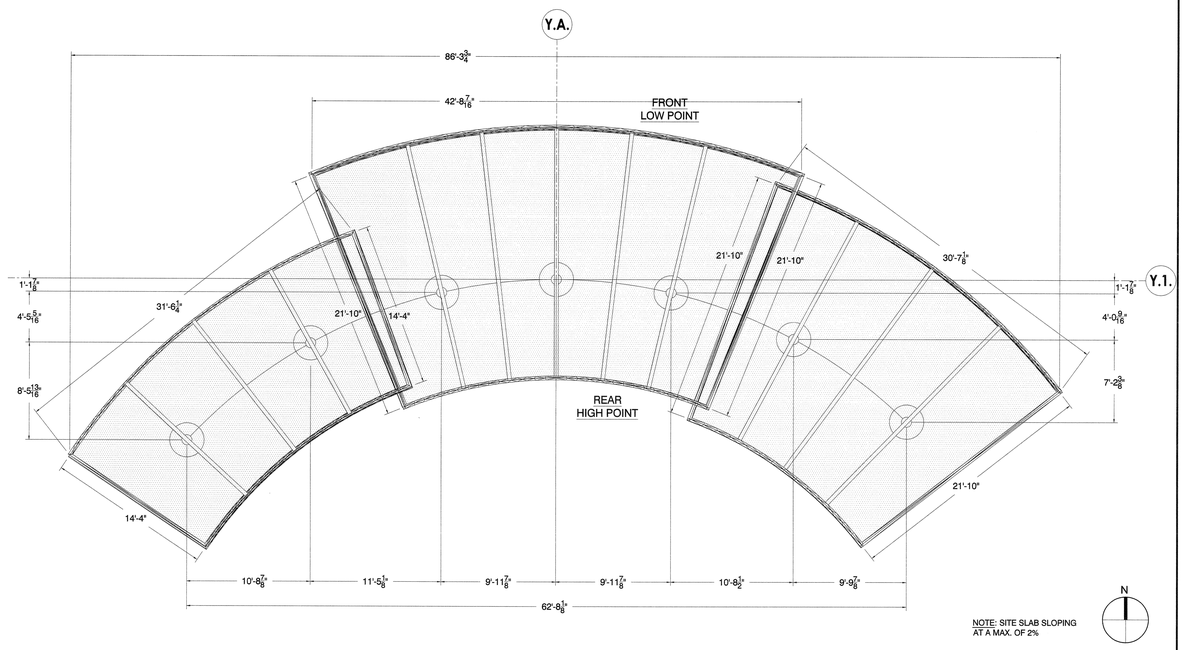

NOTE: SITE SLAB SLOPING AT A MAX. OF 2%

PLAN VIEW SCALE 3/16" = 1'-0"

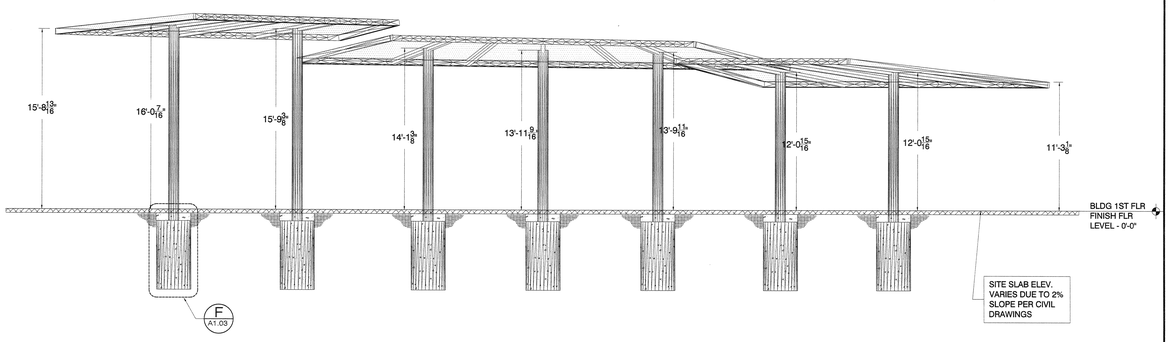

REAR ELEVATION SCALE 3/16" = 1'-0"

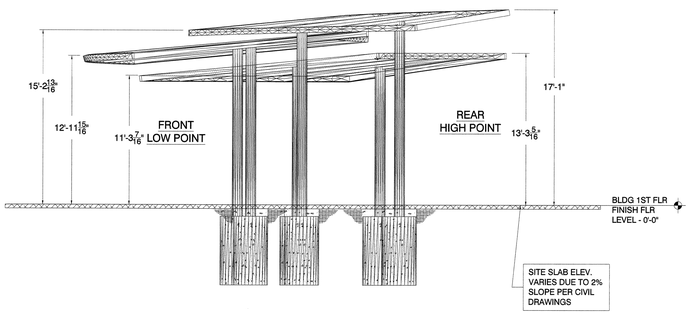

SIDE ELEVATION SCALE 3/16" = 1'-0"

GENERAL NOTES:

1. COVER/FABRIC:
   FABRIC SHEERFIL II COLOR

Omega Point Laboratories Listed Product ID 88619-9

SHEERFILL® V

SHEERFILL® V Architectural Membrane

SHEERFILL® is the trademark for a family of membranes used in permanent structures. The composite is made of fiberglass and polytetrafluoroethylene (PTFE). SHEERFILL products are available in a range of strengths and light transmission levels, providing the user with a choice of membranes to cover virtually any size structure from a full-sized stadium to a relatively small skylight. All SHEERFILL membranes conform to rigid fire and building codes for permanent buildings.

Typical Properties[1]

Property	Value	Method
Coated Fabric Weight (oz./yd.²)	29 nominal	ASTM D4851-88
Thickness (mils)	22 nominal	ASTM D4851-88
Breaking Strength (lb./in.) (Strain Rate: 2 in./min.)		ASTM D4851-88
Dry, Warp	520 min avg	
Dry, Fill	590 min avg	
Breaking Strength After Crease Fold (lb./in.)		ASTM D4851-88
Dry, Warp	355 min avg	
Dry, Fill	380 min avg	
Trapezoidal Tear (lb.)		ASTM D4851-88
Warp	35 min avg	
Fill	60 min avg	
Solar Transmission (%)	17.5 nominal	ASTM E424
Solar Reflectance (%)	72.5 nominal	ASTM E424
Burning Characteristics		
Flame Spread	0 max	ASTM E84
Smoke Generation	0 max	Tunnel Test
Incombustibility of Substrates	Pass	ASTM E136
Fire Resistance of Roof Coverings Burning Brand	Class A	ASTM E108
Flame Resistance	Pass	NFPA 701, Small Scale
Color	White (after exposure to sunlight)	
Reinforcement Construction	Warp 8150 2/2, Fill 8150 2/3-Count W32 x F23	

1- Values listed are for virgin roll goods only. Appropriate industry safety factors need to be used to account for the in-service effects of handling, weathering, etc.

Saint-Gobain Performance Plastics
701 Daniel Webster Highway
P.O. Box 1137
Merrimack, NH 03054
Customer Service: (800) 451-6101
Tel: (603) 424-9000
Fax: (603) 424-9012

www.sheerfill.com
www.fff.saint-gobain.com

Limited Warranty: For a period of 6 months from the date of first sale, Saint-Gobain Performance Plastics Corporation warrants this product(s) to be free from defects in manufacturing. Our only obligation will be to provide replacement product for any portion proving defective, or at our option, to refund the purchase price thereof. User assumes all other risks, if any, including the risk of injury, loss or damage, whether direct or consequential, arising out of the use, misuse, or inability to use this product(s). SAINT-GOBAIN PERFORMANCE PLASTICS DISCLAIMS ANY AND ALL OTHER WARRANTIES, EXPRESSED OR IMPLIED, INCLUDING THE IMPLIED WARRANTIES OF MERCHANTABILITY AND FITNESS FOR A PARTICULAR PURPOSE.

NOTE: Saint-Gobain Performance Plastics Corporation does not assume any responsibility or liability for any advice furnished by it, or for the performance or results of any installation or use of the product(s) or of any final product into which the product(s) may be incorporated by the purchaser and/or user. The purchaser and/or user should perform its own tests to determine the suitability and fitness of the product(s) for the particular purpose desired in any given situation.

SHEERFILL® is a registered trademark.
©2005 Saint-Gobain Performance Plastics Corporation
AF-1035-1M-0205-5GCS

SAINT-GOBAIN PERFORMANCE PLASTICS

F/N	QTY	U/M	Description:
			Tubing
1	110	Ft.	A500 Grade B HSS 10.750 0.375 (Post)
2	300	Ft.	A500 Grade B HSS 10 x 6 x 0.500 (Perimeter)
3	220	Ft.	A500 Grade B HSS 10 x 6 x 0.500 (Purlin)

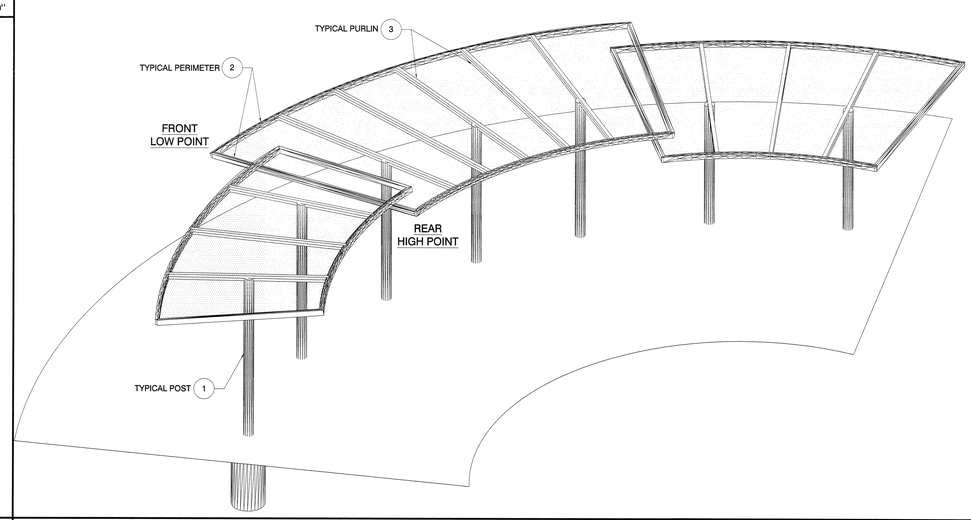

PERSPECTIVE VIEW SCALE NTS

HPI architecture
www.hpiarchitecture.com
115 22nd street
Newport Beach, CA 92663
o: 949. 675. 6442

CONSULTANTS

EIDE INDUSTRIES. INC.
16215 PIUMA AVENUE
CERRITOS, CA 90703
PHONE (562) 402-8335
FAX (562) 924-2233
www.eideindustries.com

TENSION Structures.com
Division of Eide Industries, Inc.
039169

REGISTERED PROFESSIONAL ENGINEER
No. 36486
Exp. 03-31-19
STRUCTURAL
STATE OF CALIFORNIA
AUG 16 2018

SEALS / APPROVALS

IDENTIFICATION STAMP
DIV. OF THE STATE ARCHITECT
FILE: 30-C2
A# 0 4 - 116810
AC — FLS — SS TY
DATE AUG 3 1 2018

PROJECT TITLE
JOHNSON STUDENT CENTER
1530 W 17TH ST SANTA ANA CA 92706

RANCHO SANTIAGO Community College District

SUBMITTALS

#	DATE	DESCRIPTION
	08/13/2018	DSA FINAL SUBMITTAL

PROJECT IDENTIFICATION Project Number

THESE DRAWINGS ORIGINALLY CREATED IN AUTODESK REVIT V. 2016 U.O.I

THE ORIGINAL SIZE OF THIS SHEET IS 30" X 42".

DRAWN BY AD

CHECKED BY

THESE DRAWINGS AND SPECIFICATIONS ARE THE PROPERTY AND COPYRIGHT OF THE ARCHITECT AND SHALL NOT BE USED ON ANY OTHER PROJECT OR LOCATIONS EXCEPT AS DESCRIBED ON THE DRAWINGS, WITHOUT WRITTEN AGREEMENT WITH THE ARCHITECT.

© HILL PARTNERSHIP INC. 2016

SHEET TITLE
TENSION STRUCTURE CANOPY
PLAN VIEW, FRONT, SIDE & PERSPECTIVE VIEW

SHEET NUMBER

SS1.02.1

100% CONSTRUCTION DOCUMENTS

9/6/2017 10:17:37 AM G:\My Documents\RSCCD_SAC_Johnson Center_Central_R16_mdurcal.rvt

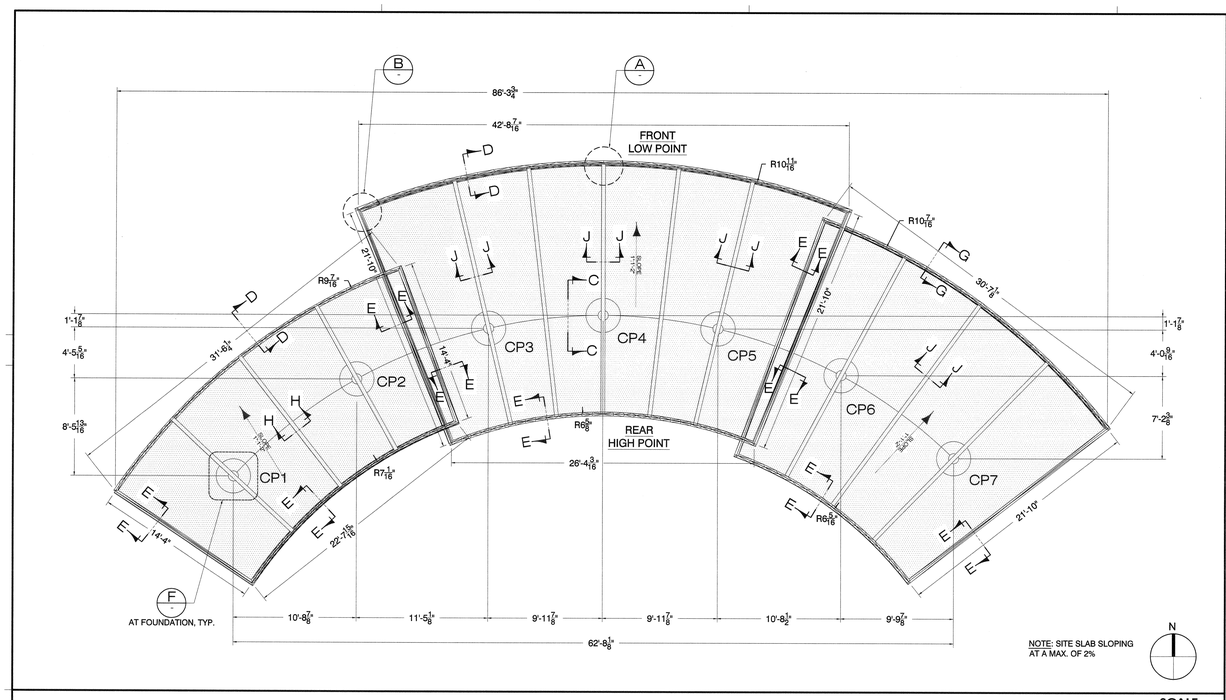

PLAN VIEW SCALE 3/16" = 1'-0"

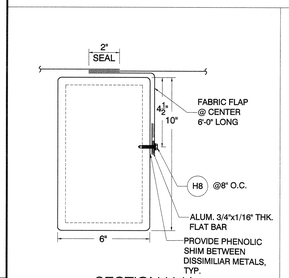

SECTION H-H

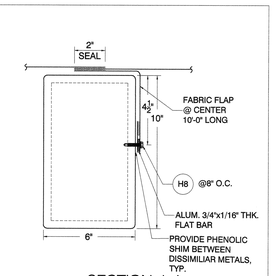

SECTION J-J

F/N	QTY	U/M	Description:
			Tubing
1	110	Ft.	A500 Grade B HSS 10.750 0.375 (Post)
2	300	Ft.	A500 Grade B HSS 10 x 6 x 0.500 (Perimeter)
2a	2	Ft.	A500 Grade B HSS 8 x 4 x 0.500 (Finger W/Spacer)
3	220	Ft.	A500 Grade B HSS 10 x 6 x 0.500 (Purlin)
			Plates & Tabs
P1	7	Ea.	A36 Steel Plate 1-1/2" Thk. (Base Plate)
P2	14	Ea.	A36 Steel Plate 3/4" Thk. (Post Connection)
P3	12	Ea.	A36 Steel Plate 3/8" Thk. (Perimeter End Cap)
P4	48	Ft.	A36 Steel Angle Bar 4x3x3/8" Thk. (Purlin Connection)
P5	22	Ea.	A36 Steel Plate 3/8" Thk. (Purlin End Cap)
P6	75	Ea.	A36 Steel Plate 2x2x5/8" Thk. (Fabric Attachment)
			Hardware
H1	42	Ea.	A325 Galv. 3/4" x 3" Hex Bolt (Post Connection)
	42	Ea.	F563 Galv. 3/4" Hex Nut
	84	Ea.	F436 Flat Washer 3/4"
	42	Ea.	F436 Lock Washer 3/4"
H2	36	Ea.	A325 Galv. 5/8" x 8-1/2" Hex Bolt (End Perimeter)
	36	Ea.	F563 Galv. 5/8" Hex Nut
	72	Ea.	F436 Flat Washer 5/8"
	36	Ea.	F436 Lock Washer 5/8"
H3	2	Ea.	A325 Galv. 5/8" x 7-1/2" Hex Bolt (Perimeter Finger)
	2	Ea.	F563 Galv. 5/8" Hex Nut
	4	Ea.	F436 Flat Washer 5/8"
	2	Ea.	F436 Lock Washer 5/8"
H4	66	Ea.	A325 Galv. 5/8" x 8-1/2" Hex Bolt (Purlin)
	66	Ea.	F563 Galv. 5/8" Hex Nut
	132	Ea.	F436 Flat Washer 5/8"
	66	Ea.	F436 Lock Washer 5/8"
H5	210	Ft.	6061-T52 Mill Finish Alum. Rail Bolt On
H6	210	Ea.	F593 S.S. Bolt FullyThread Hex HeadS.S. 3/8-16 6" Long
	210	Ea.	F594 S.S. 3/8" Hex Nut
	210	Ea.	F436 Flat Washer 3/8"
	210	Ea.	F436 Lock Washer 3/8"
H7	110	Ft.	Alum. Keder Rail "Roof Mount" PN48.5020.31.05
H8	120	Ea.	ESR-1976 ITW Builder Self drilling Fasteners
			1/4-28x1.5" Long Screw
			Fabric
F1		Yds	Shearfill Fabric
F2		Ft.	Cordraw 12mm (1/2" Keder)

NOTE: ALL EXPOSED STEEL TO BE HOT-DIPPED GALVANIZED PER ASTM A123 AND A153.

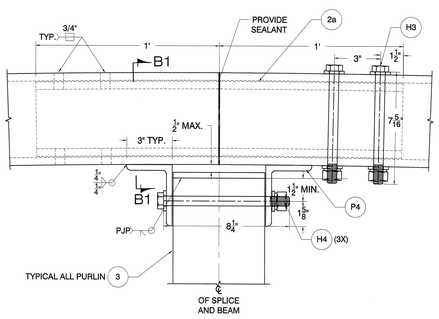

A MIDDLE PURLIN DETAIL TYPICAL
SCALE: 3"=1'

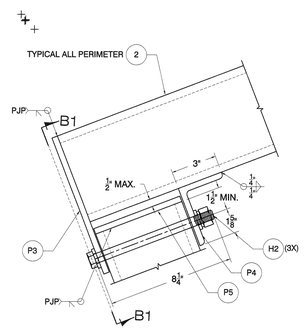

B END PERIMETER DETAIL TYPICAL
SCALE: 3"=1'

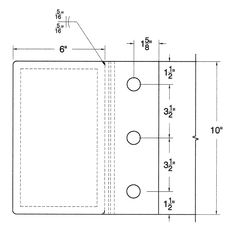

SECTION B1-B1

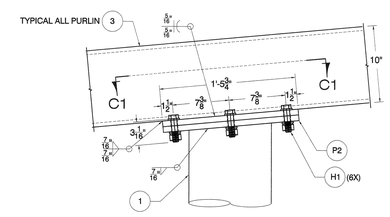

C SECTION C-C (POST CONNECTION DETAIL)
SCALE: 3"=1'

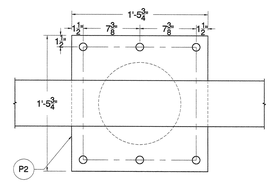

SECTION C1-C1

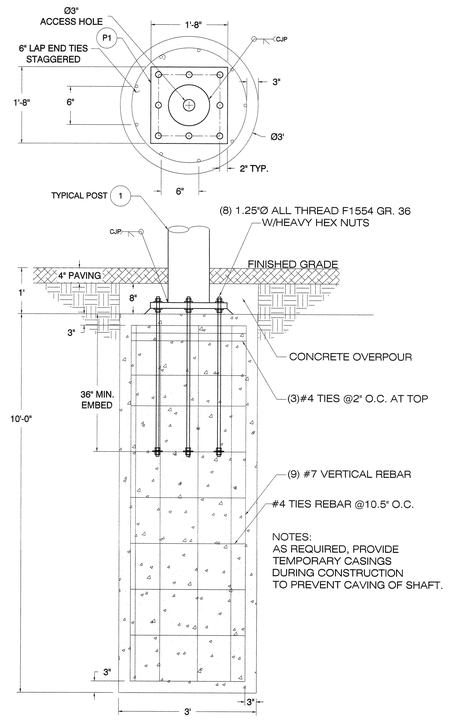

F FOOTING TYPICAL 7 PLACES
SCALE: 3/4"=1'

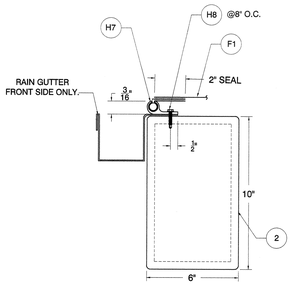

D SECTION D-D (FABRIC CONNECTION AND RAIN GUTTER DETAIL)
SCALE: 3"=1'

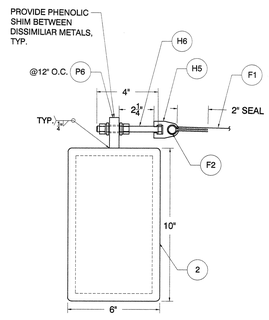

E SECTION E-E (FABRIC CONNECTION TYPICAL 3 SIDES)
SCALE: 3"=1'

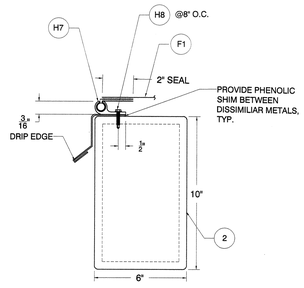

G SECTION G-G (FABRIC CONNECTION AND RAIN GUTTER DETAIL)
SCALE: 3"=1'

HPI architecture
www.hpiarchitecture.com
115 22nd street
Newport Beach, CA 92663
o: 949. 675. 6442

CONSULTANTS

EIDE INDUSTRIES, INC.
16215 PIUMA AVENUE
CERRITOS, CA 90703
PHONE (562) 402-8335
FAX (562) 924-2233
www.eideindustries.com

TENSION Structures.com
Division of Eide Industries, Inc.
039169

REGISTERED PROFESSIONAL ENGINEER
DAVID ALAN FERGUSON
No. S-3111
STRUCTURAL
STATE OF CALIFORNIA
AUG 16 2018

SEALS / APPROVALS

REGISTERED PROFESSIONAL ENGINEER
LANCE A. HILL
No. C 35135
CIVIL
STATE OF CALIFORNIA

IDENTIFICATION STAMP
DIV. OF THE STATE ARCHITECT
FILE: 30-C2
A# 0 4 - 116810
AC — FLS — SS
DATE AUG 3 1 2018

PROJECT TITLE
JOHNSON STUDENT CENTER
1530 W 17TH ST SANTA ANA CA 92706

RANCHO SANTIAGO Community College District

SUBMITTALS		
#	DATE	DESCRIPTION
	08/13/2018	DSA FINAL SUBMITTAL

PROJECT IDENTIFICATION Project Number

THESE DRAWINGS ORIGINALLY CREATED IN AUTODESK REVIT V. 2016 U.O.7

THE ORIGINAL SIZE OF THIS SHEET IS 30" X 42".

DRAWN BY AD

CHECKED BY

THESE DRAWINGS AND SPECIFICATIONS ARE THE PROPERTY AND COPYRIGHT OF THE ARCHITECT AND SHALL NOT BE USED ON ANY OTHER PROJECT OR LOCATIONS EXCEPT AS DESCRIBED ON THE DRAWINGS, WITHOUT WRITTEN AGREEMENT WITH THE ARCHITECT.

© HILL PARTNERSHIP INC. 2016

SHEET TITLE
TENSION STRUCTURE CANOPY FRAME & FABRIC DETAIL

SHEET NUMBER
SS1.03

100% CONSTRUCTION DOCUMENTS

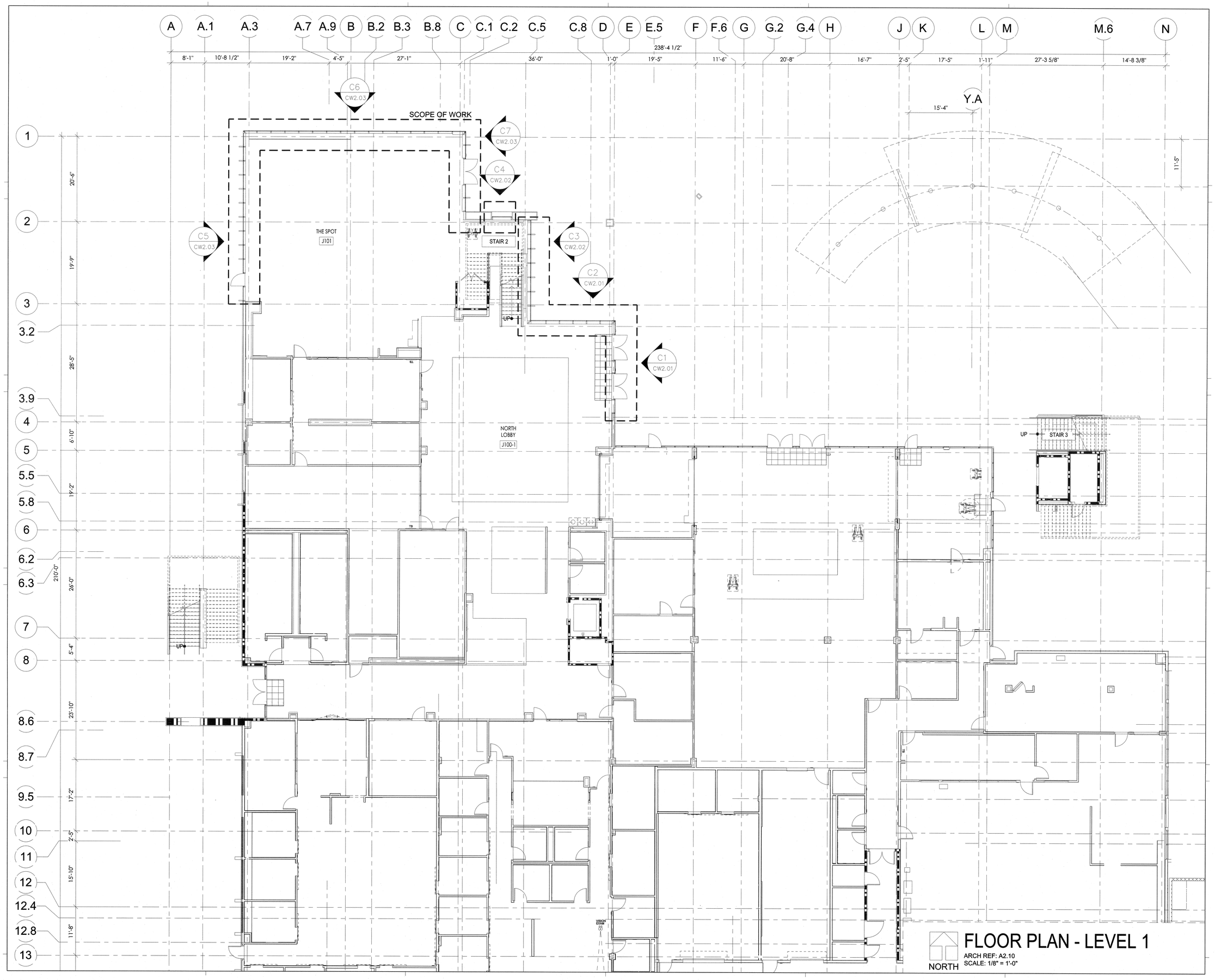

FLOOR PLAN - LEVEL 1

ARCH REF: A2.10
SCALE: 1/8" = 1'-0"

HPI architecture
www.hpiarchitecture.com
115 22nd street
Newport Beach, CA 92663
o: 949. 675. 6442

CONSULTANTS

arcadia

REGISTERED STRUCTURAL ENGINEER
RAFAEL TOSKES
NO. S5733
EXP. 12-31-19
STRUCTURAL
STATE OF CALIFORNIA
AUG 30 2018

SEALS / APPROVALS

LICENSED LANDSCAPE ARCHITECT
NO. 5135
STATE OF CALIFORNIA

IDENTIFICATION STAMP
DIV. OF THE STATE ARCHITECT
FILE: 30-C2
A# 04-116810
AC — FLS — SS TY
DATE AUG 31 2018

PROJECT TITLE

JOHNSON STUDENT CENTER
INCREMENT 2
1530 W 17TH ST SANTA ANA CA 92706

RANCHO SANTIAGO
Community College District

SUBMITTALS

#	DATE	DESCRIPTION
	08/13/2018	DSA FINAL SUBMITTAL

PROJECT IDENTIFICATION Project Number

THESE DRAWINGS ORIGINALLY CREATED IN AUTODESK REVIT V. 2016 U.O.N.

THE ORIGINAL SIZE OF THIS SHEET IS 30" X 42".

DRAWN BY RM

CHECKED BY -

THESE DRAWINGS AND SPECIFICATIONS ARE THE PROPERTY AND COPYRIGHT OF THE ARCHITECT AND SHALL NOT BE USED ON ANY OTHER PROJECT OR LOCATIONS EXCEPT AS CONTEMPLATED IN THE DRAWINGS, WITHOUT WRITTEN AGREEMENT WITH THE ARCHITECT.

© HILL PARTNERSHIP INC. 2017

SHEET TITLE

FIRST FLOOR

SHEET NUMBER

CW1.01

DSA FINAL SUBMITTAL

FLOOR PLAN - LEVEL 2

ARCH REF: A2.20
SCALE: 1/8" = 1'-0"

HPI architecture
www.hpiarchitecture.com
115 22nd street
Newport Beach, CA 92663
o: 949. 675. 6442

CONSULTANTS

arcadia

REGISTERED STRUCTURAL ENGINEER
SEAN JOSEPH CLIFFORD
NO. S3733
EXP. 12-31-19
STATE OF CALIFORNIA
AUG 30 2018

SEALS / APPROVALS

REGISTERED PROFESSIONAL ENGINEER
NO. 17500
STATE OF CALIFORNIA

IDENTIFICATION STAMP
DIV. OF THE STATE ARCHITECT
FILE: 30-C2
A# 04-116810
AC — FLS — SS Ty
DATE AUG 31 2018

PROJECT TITLE

JOHNSON STUDENT CENTER
INCREMENT 2
1530 W 17TH ST SANTA ANA CA 92706

RANCHO SANTIAGO
Community College District

SUBMITTALS

#	DATE	DESCRIPTION
	08/13/2018	DSA FINAL SUBMITTAL

PROJECT IDENTIFICATION Project Number

THESE DRAWINGS ORIGINALLY CREATED IN AUTODESK REVIT V. 2016 U.O.N.

THE ORIGINAL SIZE OF THIS SHEET IS 30" X 42".

DRAWN BY RM

CHECKED BY -

THESE DRAWINGS AND SPECIFICATIONS ARE THE PROPERTY AND COPYRIGHT OF THE ARCHITECT AND SHALL NOT BE USED ON ANY OTHER PROJECT OR LOCATIONS EXCEPT AS DESCRIBED ON THE DRAWINGS, WITHOUT WRITTEN AGREEMENT WITH THE ARCHITECT.

© HILL PARTNERSHIP INC. 2017

SHEET TITLE

SECOND FLOOR

SHEET NUMBER

CW1.02

DSA FINAL SUBMITTAL

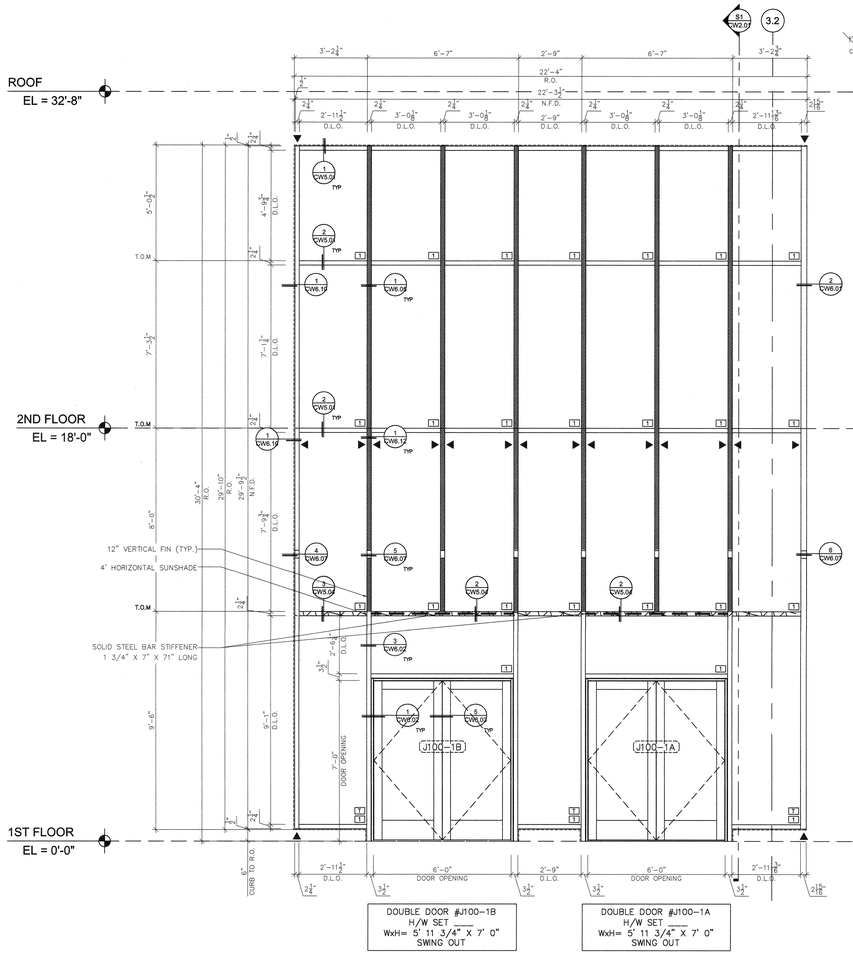

C1 CURTAIN WALL ELEVATION
(Ref. Arch : 1 / A8.40)

- FRAME : CURTAIN WALL T500-OPG3000
- DOOR : HEAVY DUTY MEDIUM STILE (MS362HD)
- GLASS : 1" GLASS
- Q'TY : 1 SET

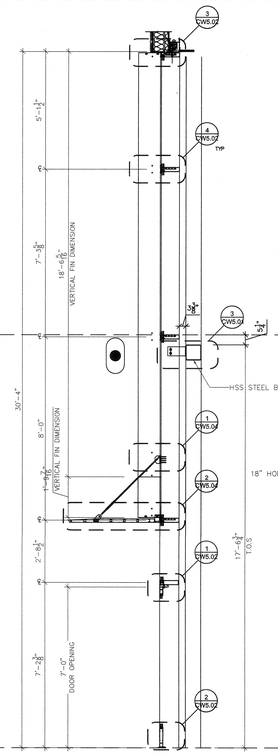

S1 OPG3000 CURTAIN WALL SECTION
ARCH. REF. : –
SHOP. REF. : X/XX

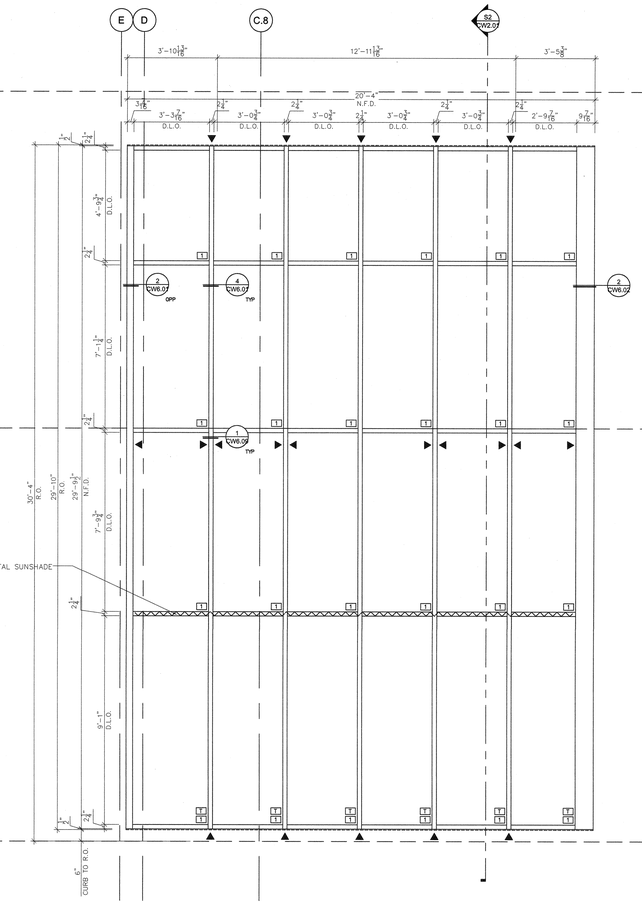

C2 CURTAIN WALL ELEVATION
(Ref. Arch : 2 / A8.40)

- FRAME : CURTAIN WALL T500-OPG3000
- GLASS : 1" GLASS
- Q'TY : 1 SET

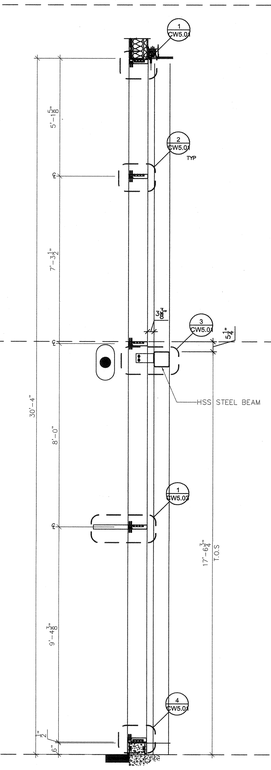

S2 OPG3000 CURTAIN WALL SECTION
ARCH. REF. : –
SHOP. REF. : X/XX

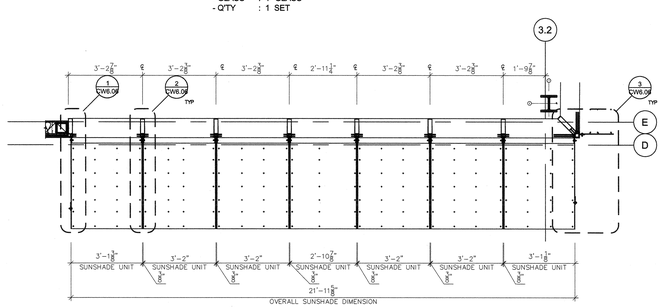

P1 OPG3000 CURTAIN WALL PLAN
ARCH. REF. : –
SHOP. REF. : X/XX

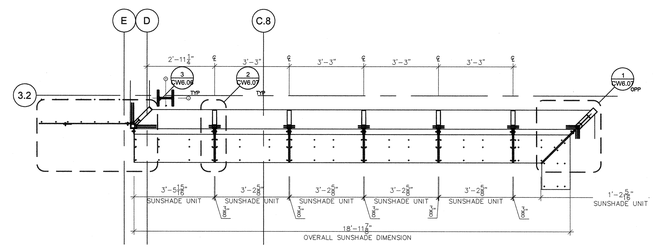

P2 OPG3000 CURTAIN WALL PLAN
ARCH. REF. : –
SHOP. REF. : X/XX

ANCHOR LEGEND
- ANCHOR LOCATION
- DEAD LOAD ANCHOR
- WIND LOAD ANCHOR

GLASS LEGEND
- EXTERIOR: 1" INSULATED GLASS UNIT SOLAR CONTROL LOW-E INSULATED GLASS UNIT BASIS OF DESIGN PPG INSUSTRIES
- TEMPERED GLASS

HPI architecture
www.hpiarchitecture.com
115 22nd street
Newport Beach, CA 92663
o: 949. 675. 6442

CONSULTANTS

arcadia

SEALS / APPROVALS

AUG 30 2018

IDENTIFICATION STAMP
DIV. OF THE STATE ARCHITECT
FILE: 30-C2
A# 04-116810
AC — FLS — SS TY
DATE AUG 31 2018

PROJECT TITLE

JOHNSON STUDENT CENTER
INCREMENT 2
1530 W 17TH ST SANTA ANA CA 92706

RANCHO SANTIAGO Community College District

SUBMITTALS

#	DATE	DESCRIPTION
	08/13/2018	DSA FINAL SUBMITTAL

PROJECT IDENTIFICATION Project Number

THESE DRAWINGS ORIGINALLY CREATED IN AUTODESK REVIT V. 2016 U.O.N.

THE ORIGINAL SIZE OF THIS SHEET IS 30" X 42".

DRAWN BY RM

CHECKED BY -

THESE DRAWINGS AND SPECIFICATIONS ARE THE PROPERTY AND COPYRIGHT OF THE ARCHITECT AND SHALL NOT BE USED ON ANY OTHER PROJECT OR LOCATIONS EXCEPT AS DESCRIBED ON THE DRAWINGS, WITHOUT WRITTEN AGREEMENT WITH THE ARCHITECT.

© HILL PARTNERSHIP INC. 2017

SHEET TITLE

OPG3000
CURTAIN WALL
ELEVATIONS

SHEET NUMBER

CW2.01

DSA FINAL SUBMITTAL

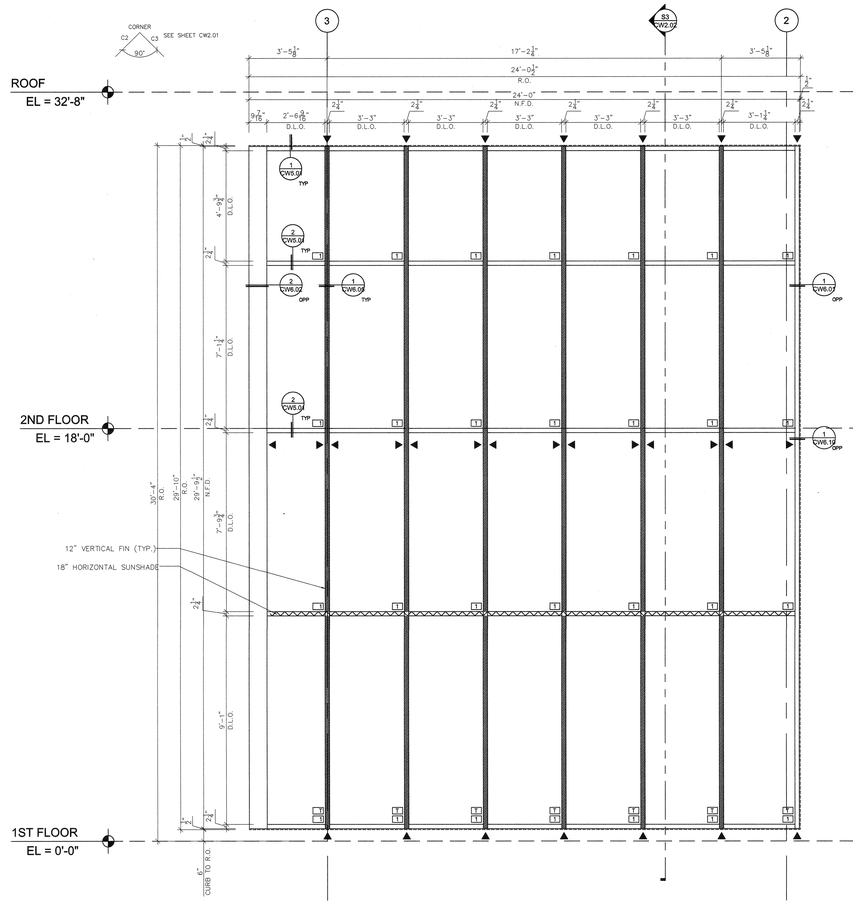

C3 CURTAIN WALL ELEVATION
(Ref. Arch : 3 / A8.40)

- FRAME : CURTAIN WALL T500-OPG3000
- GLASS : 1" GLASS
- Q'TY : 1 SET

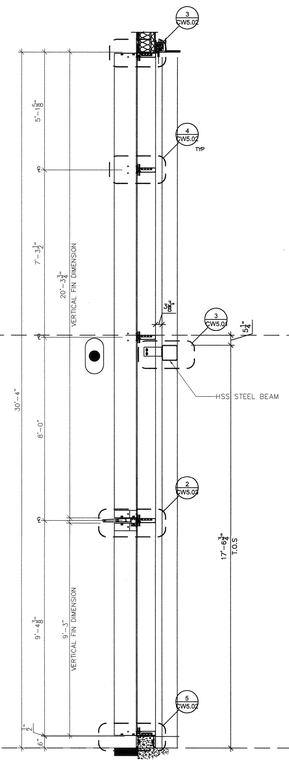

S3 OPG3000 CURTAIN WALL SECTION
ARCH. REF. : –
SHOP. REF. : X/XX

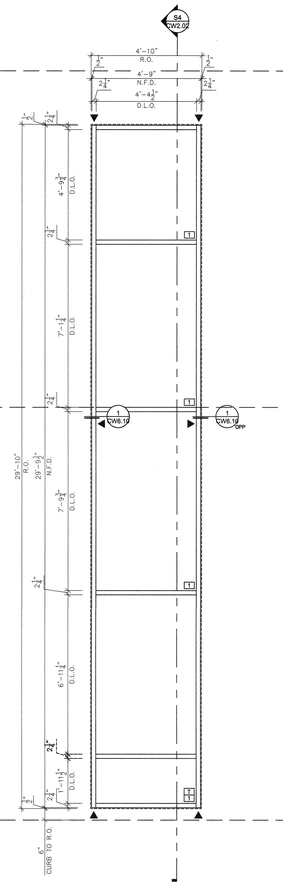

C4 CURTAIN WALL ELEVATION
(Ref. Arch : 4 / A8.40)

- FRAME : CURTAIN WALL T500-OPG3000
- GLASS : 1" GLASS
- Q'TY : 1 SET

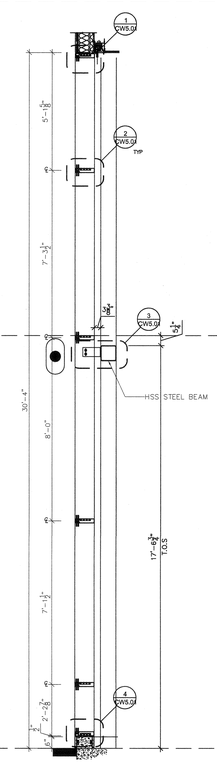

S4 OPG3000 CURTAIN WALL SECTION
ARCH. REF. : –
SHOP. REF. : X/XX

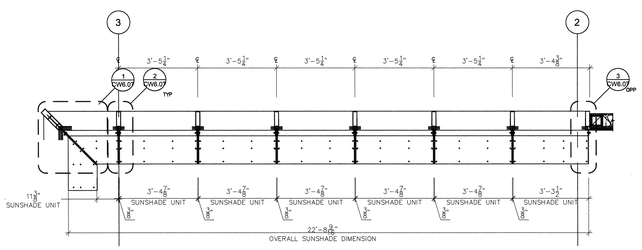

P3 OPG3000 CURTAIN WALL PLAN
ARCH. REF. : –
SHOP. REF. : X/XX

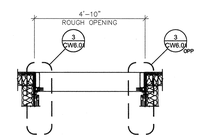

P4 OPG3000 CURTAIN WALL PLAN
ARCH. REF. : –
SHOP. REF. : X/XX

ANCHOR LEGEND
◄ ANCHOR LOCATION
● DEAD LOAD ANCHOR
● WIND LOAD ANCHOR

GLASS LEGEND
EXTERIOR: 1" INSULATED GLASS UNIT SOLAR CONTROL LOW-E INSULATED GLASS UNIT BASIS OF DESIGN PPG INSUSTRIES
TEMPERED GLASS

HPI architecture
www.hpiarchitecture.com
115 22nd street
Newport Beach, CA 92663
o: 949. 675. 6442

CONSULTANTS

arcadia

SEALS / APPROVALS

AUG 30 2018

IDENTIFICATION STAMP
DIV. OF THE STATE ARCHITECT
FILE: 30-C2
A# 04-116810
AC — FLS — SS TJ
DATE AUG 31 2018

PROJECT TITLE
JOHNSON STUDENT CENTER
INCREMENT 2
1530 W 17TH ST SANTA ANA CA 92706

RANCHO SANTIAGO Community College District

SUBMITTALS

#	DATE	DESCRIPTION
	08/13/2018	DSA FINAL SUBMITTAL

PROJECT IDENTIFICATION Project Number

THESE DRAWINGS ORIGINALLY CREATED IN AUTODESK REVIT V. 2016 U.O.N.

THE ORIGINAL SIZE OF THIS SHEET IS 30" X 42".

DRAWN BY RM

CHECKED BY -

THESE DRAWINGS AND SPECIFICATIONS ARE THE PROPERTY AND COPYRIGHT OF THE ARCHITECT AND SHALL NOT BE USED ON ANY OTHER PROJECT OR LOCATIONS EXCEPT AS DESCRIBED ON THE DRAWINGS, WITHOUT WRITTEN AGREEMENT WITH THE ARCHITECT.

© HILL PARTNERSHIP INC. 2017

SHEET TITLE
OPG3000
CURTAIN WALL
ELEVATIONS

SHEET NUMBER
CW2.02

DSA FINAL SUBMITTAL

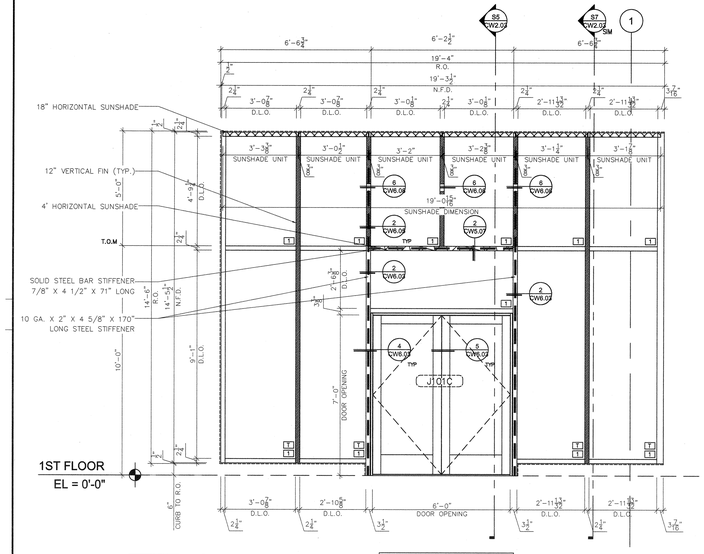

C7 CURTAIN WALL ELEVATION
(Ref. Arch : 7 / A8.40)

- FRAME : CURTAIN WALL T500-OPG1900
- DOOR : HEAVY DUTY MEDIUM STILE (MS362HD)
- GLASS : 1" GLASS
- Q'TY : 1 SET

DOUBLE DOOR #J101C
H/W SET
WxH= 5' 9 1/2" X 7' 0"
SWING OUT

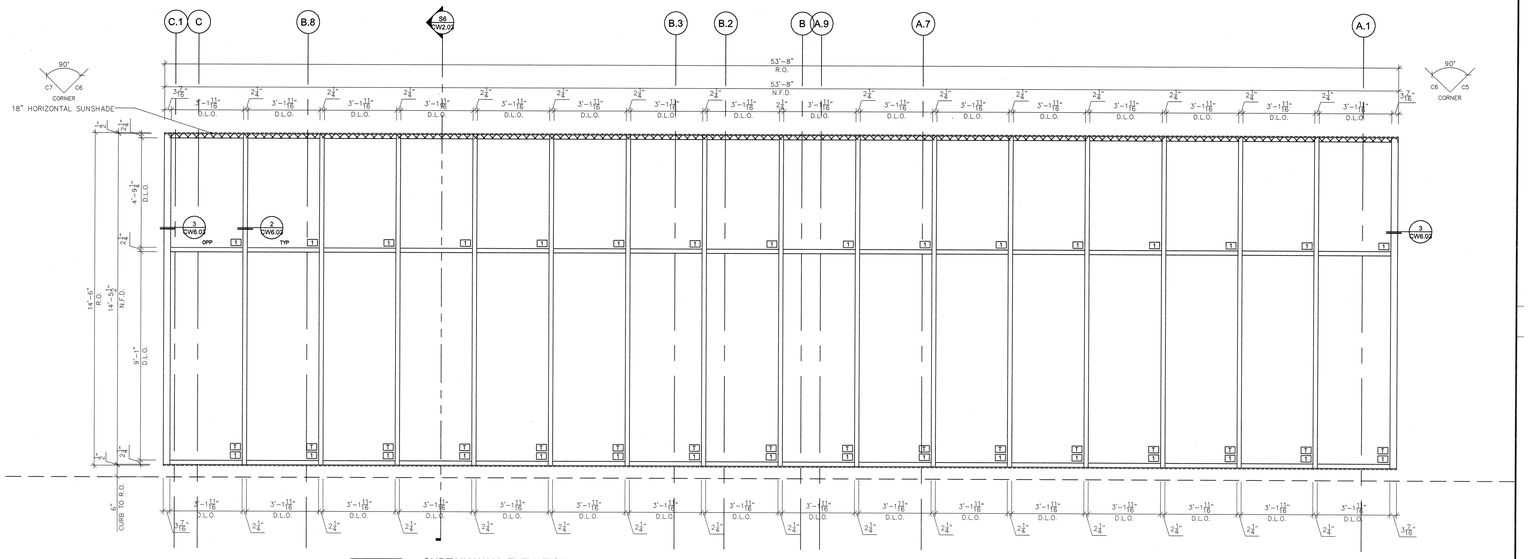

C6 CURTAIN WALL ELEVATION
(Ref. Arch : 6 / A8.40)

- FRAME : CURTAIN WALL T500-OPG1900
- GLASS : 1" GLASS
- Q'TY : 1 SET

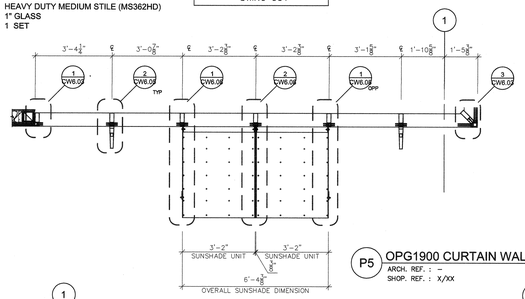

P5 OPG1900 CURTAIN WALL PLAN
ARCH. REF. : –
SHOP. REF. : X/XX

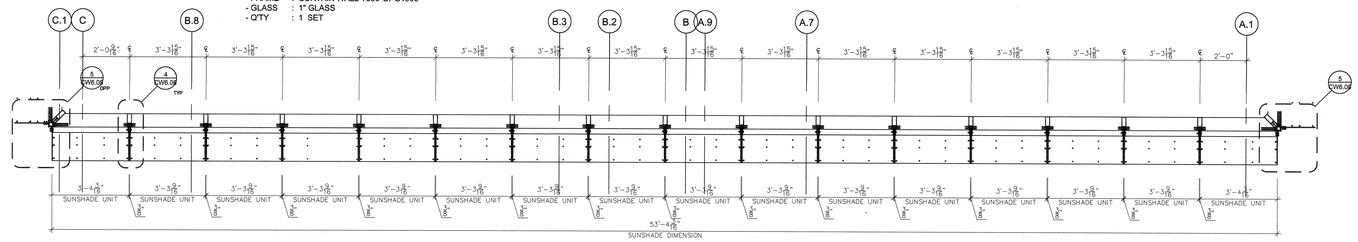

P6 OPG1900 CURTAIN WALL PLAN
ARCH. REF. : –
SHOP. REF. : X/XX

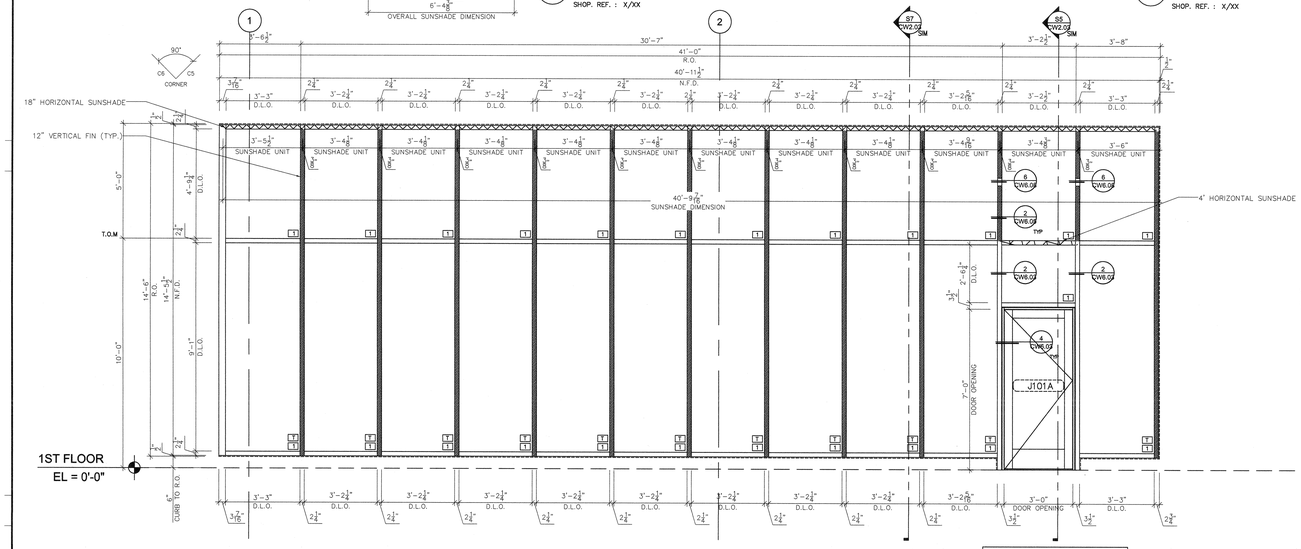

C5 CURTAIN WALL ELEVATION
(Ref. Arch : 5 / A8.40)

- FRAME : CURTAIN WALL T500-OPG1900
- DOOR : HEAVY DUTY MEDIUM STILE (MS362HD)
- GLASS : 1" GLASS
- Q'TY : 1 SET

SINGLE DOOR #J101A
H/W SET
WxH= 2' 9 1/2" X 7' 0"
HINGE RIGHT / SWING OUT

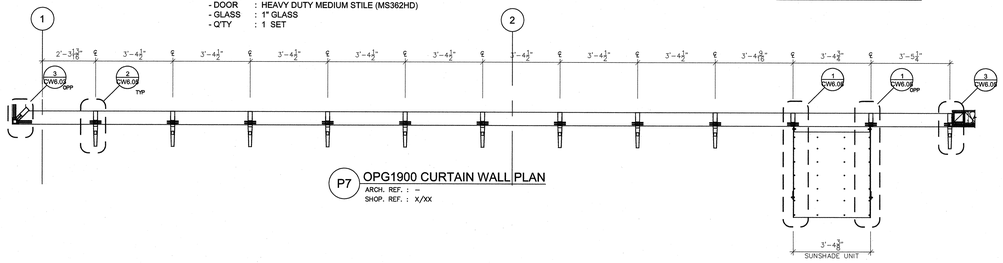

P7 OPG1900 CURTAIN WALL PLAN
ARCH. REF. : –
SHOP. REF. : X/XX

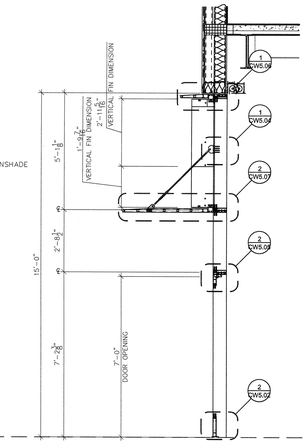

S5 OPG1900 CURTAIN WALL SECTION
ARCH. REF. : 1 / A5.10
SHOP. REF. : X/XX

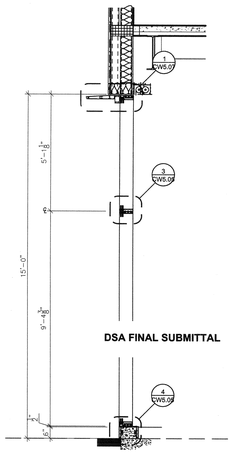

DSA FINAL SUBMITTAL

S6 OPG1900 CURTAIN WALL SECTION
ARCH. REF. : –
SHOP. REF. : X/XX

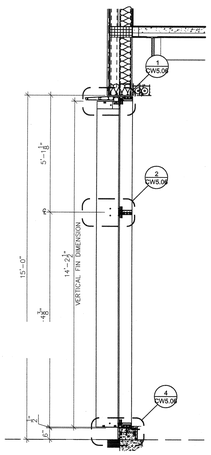

S7 OPG1900 CURTAIN WALL SECTION
ARCH. REF. : –
SHOP. REF. : X/XX

ANCHOR LEGEND
◄ ANCHOR LOCATION
● DEAD LOAD ANCHOR
◉ WIND LOAD ANCHOR

GLASS LEGEND
EXTERIOR: 1" INSULATED GLASS UNIT SOLAR CONTROL LOW-E INSULATED GLASS UNIT BASIS OF DESIGN PPG INSUSTRIES
TEMPERED GLASS

HPI architecture
www.hpiarchitecture.com
115 22nd street
Newport Beach, CA 92663
o: 949. 675. 6442

CONSULTANTS

arcadia

REGISTERED PROFESSIONAL ENGINEER STRUCTURAL NO. 53733 EXP. 12-31-19 STATE OF CALIFORNIA
AUG 30 2018

SEALS / APPROVALS

LICENSED ARCHITECT REGISTERED PROFESSIONAL ENGINEER NO. C-17520 STATE OF CALIFORNIA
AUG 30 2018

IDENTIFICATION STAMP
DIV. OF THE STATE ARCHITECT
FILE: 30-C2
A# 04-116810
AC — FLS — SS TY
DATE AUG 31 2018

PROJECT TITLE
JOHNSON STUDENT CENTER
INCREMENT 2
1530 W 17TH ST SANTA ANA CA 92706

RANCHO SANTIAGO Community College District

SUBMITTALS

#	DATE	DESCRIPTION
	08/13/2018	DSA FINAL SUBMITTAL

PROJECT IDENTIFICATION Project Number

THESE DRAWINGS ORIGINALLY CREATED IN AUTODESK REVIT V. 2016 U.O.N.

THE ORIGINAL SIZE OF THIS SHEET IS 30" X 42".

DRAWN BY RM

CHECKED BY -

THESE DRAWINGS AND SPECIFICATIONS ARE THE PROPERTY AND COPYRIGHT OF THE ARCHITECT AND SHALL NOT BE USED ON ANY OTHER PROJECT OR LOCATIONS EXCEPT AS DESCRIBED ON THE DRAWINGS, WITHOUT WRITTEN AGREEMENT WITH THE ARCHITECT.

© HILL PARTNERSHIP INC. 2017

SHEET TITLE
OPG1900 CURTAIN WALL ELEVATIONS

SHEET NUMBER
CW2.03

DSA FINAL SUBMITTAL

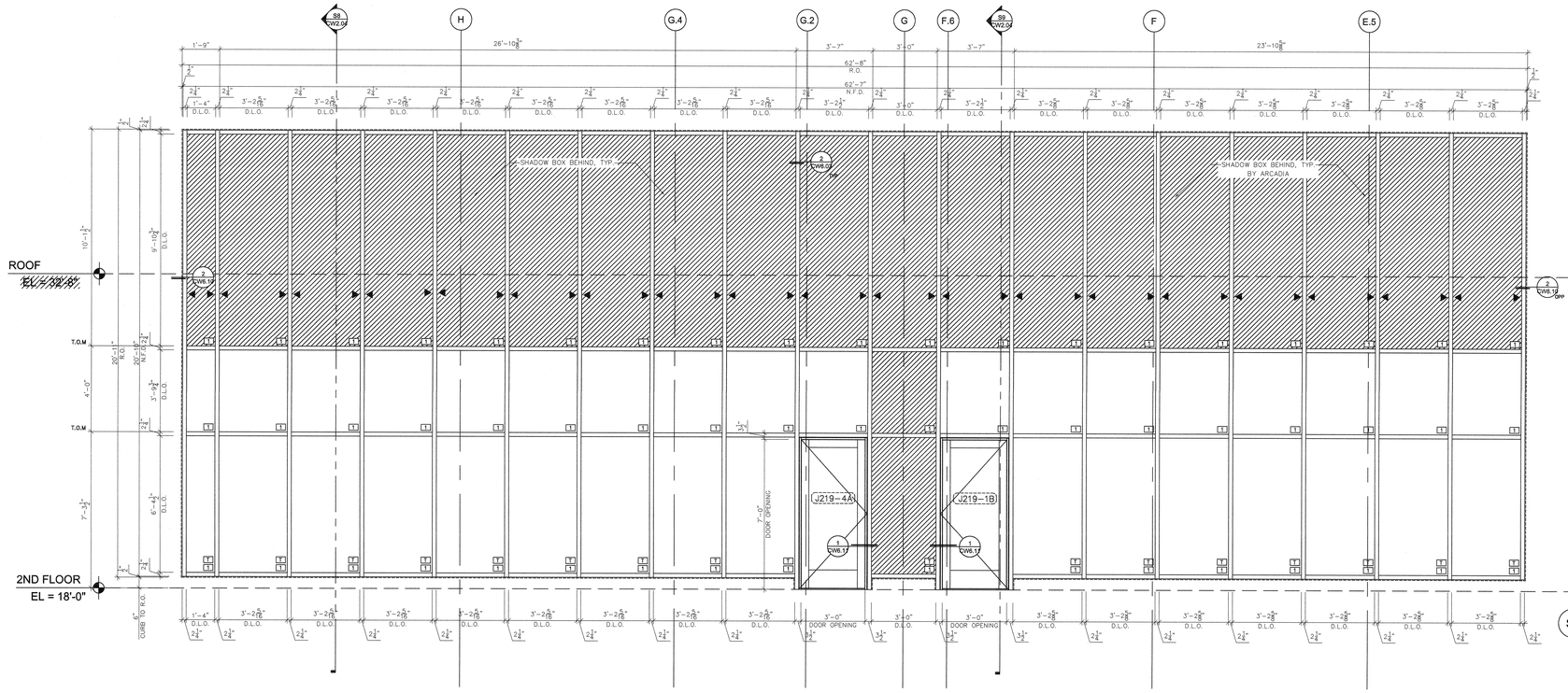

SINGLE DOOR #J219-4A
H/W SET
WxH= 3' 1/2" X 7' 0"
HINGE RIGHT / SWING OUT

SINGLE DOOR #J219-1B
H/W SET
WxH= 3' 1/2" X 7' 0"
HINGE LEFT / SWING OUT

C8 CURTAIN WALL ELEVATION
(Ref. Arch : 8 / A8.40)

- FRAME : CURTAIN WALL T500-OPG1900
- DOOR : HEAVY DUTY MEDIUM STILE (MS362HD)
- GLASS : 1" GLASS
- Q'TY : 1 SET

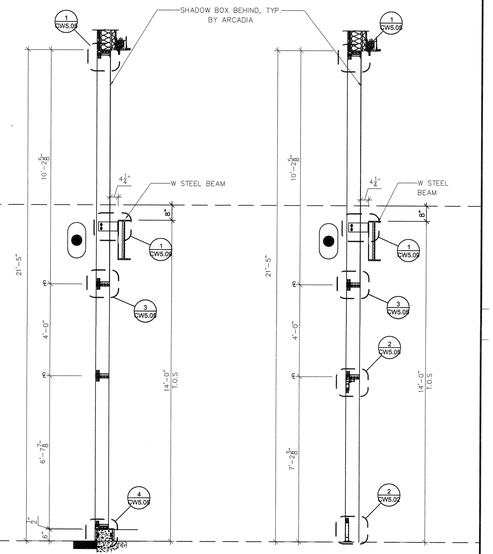

S8 OPG1900 CURTAIN WALL SECTION
ARCH. REF. : 2 / A5.10
SHOP. REF. : X/XX

S9 OPG1900 CURTAIN WALL SECTION
ARCH. REF. : 2 / A5.10 (SIM)
SHOP. REF. : X/XX

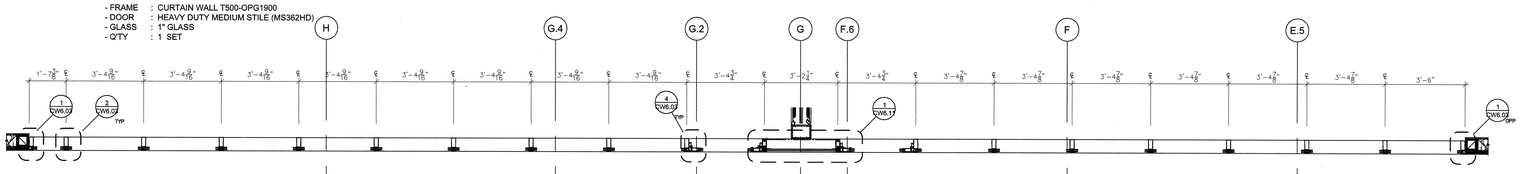

P8 OPG1900 CURTAIN WALL PLAN
ARCH. REF. : –
SHOP. REF. : X/XX

ANCHOR LEGEND
- ANCHOR LOCATION
- DEAD LOAD ANCHOR
- WIND LOAD ANCHOR

GLASS LEGEND
- EXTERIOR: 1" INSULATED GLASS UNIT SOLAR CONTROL, LOW-E INSULATED GLASS UNIT BASIS OF DESIGN PPG INSUSTRIES
- TEMPERED GLASS

HPI architecture
www.hpiarchitecture.com
115 22nd street
Newport Beach, CA 92663
o: 949. 675. 6442

CONSULTANTS

arcadia

REGISTERED PROFESSIONAL ENGINEER JOSEPH A. KEEP NO. S5733 EXP. 12-31-19 STRUCTURAL STATE OF CALIFORNIA
AUG 30 2018

SEALS / APPROVALS

LICENSED ARCHITECT JAMES W. HILL No. 11505 STATE OF CALIFORNIA
AUG 31 2018

IDENTIFICATION STAMP
DIV. OF THE STATE ARCHITECT
FILE: 30-C2
A# 04-116810
AC — FLS — SS TY
DATE AUG 31 2018

PROJECT TITLE
JOHNSON STUDENT CENTER
INCREMENT 2
1530 W 17TH ST SANTA ANA CA 92706

RANCHO SANTIAGO Community College District

SUBMITTALS

#	DATE	DESCRIPTION
	08/13/2018	DSA FINAL SUBMITTAL

PROJECT IDENTIFICATION Project Number

THESE DRAWINGS ORIGINALLY CREATED IN AUTODESK REVIT v. 2016 U.O.N.

THE ORIGINAL SIZE OF THIS SHEET IS 30" X 42".

DRAWN BY RM

CHECKED BY -

THESE DRAWINGS AND SPECIFICATIONS ARE THE PROPERTY AND COPYRIGHT OF THE ARCHITECT AND SHALL NOT BE USED ON ANY OTHER PROJECT OR LOCATIONS EXCEPT AS DESCRIBED ON THE DRAWINGS, WITHOUT WRITTEN AGREEMENT WITH THE ARCHITECT.

© HILL PARTNERSHIP INC. 2017

SHEET TITLE
OPG1900
CURTAIN WALL
ELEVATIONS

SHEET NUMBER
CW2.04

DSA FINAL SUBMITTAL

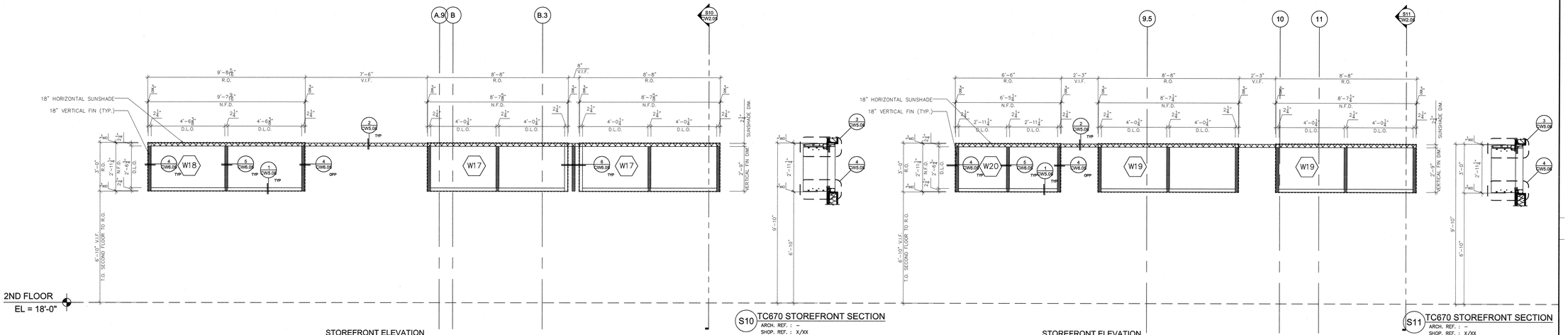

S10 TC670 STOREFRONT SECTION
ARCH. REF. : –
SHOP. REF. : X/XX

S11 TC670 STOREFRONT SECTION
ARCH. REF. : –
SHOP. REF. : X/XX

SS1 STOREFRONT ELEVATION W/ SUNSHADE
(Ref. Arch : 1 / A4.02)

- FRAME : STOREFRONT TC-670
- SUNSHADE : BSD003 (18")
- VERTICAL FIN : OPG600225, OPGPRO9, & OPGPRO10 (18")
- GLASS : 1" GLASS
- Q'TY : 1 SET

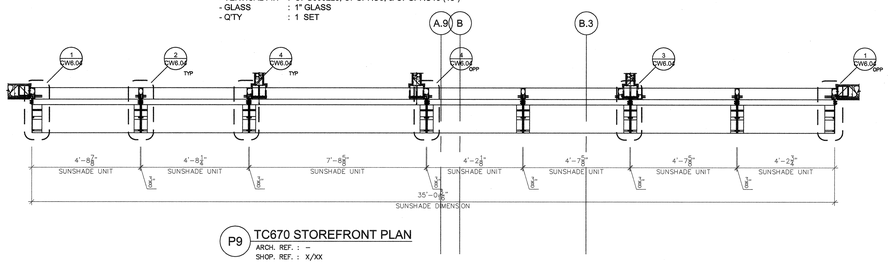

P9 TC670 STOREFRONT PLAN
ARCH. REF. : –
SHOP. REF. : X/XX

SS2 STOREFRONT ELEVATION W/ SUNSHADE
(Ref. Arch : 2 / A4.02)

- FRAME : STOREFRONT TC-670
- SUNSHADE : BSD003 (18")
- VERTICAL FIN : OPG600225, OPGPRO9, & OPGPRO10 (18")
- GLASS : 1" GLASS
- Q'TY : 1 SET

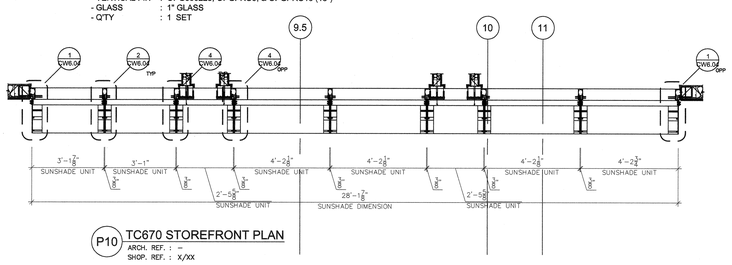

P10 TC670 STOREFRONT PLAN
ARCH. REF. : –
SHOP. REF. : X/XX

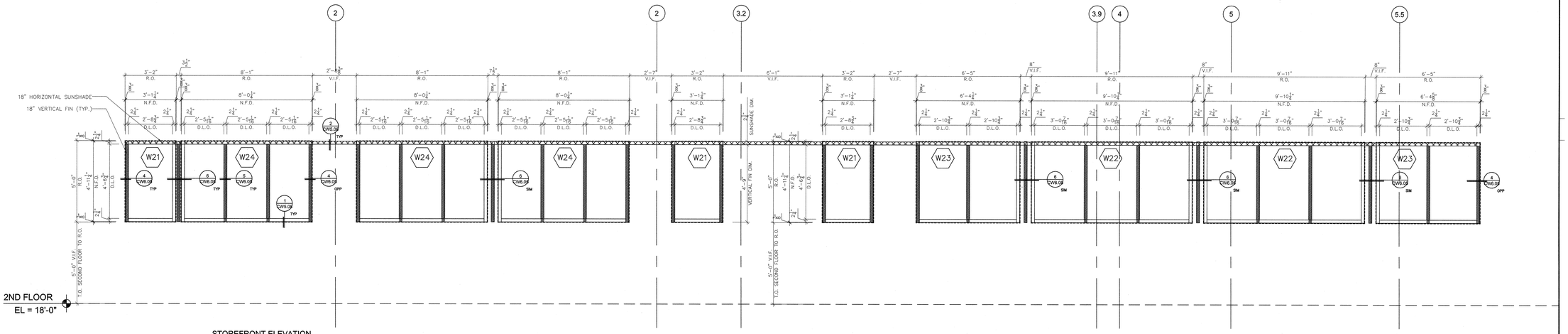

SS3 STOREFRONT ELEVATION W/ SUNSHADE
(Ref. Arch : 2 / A4.02)

- FRAME : STOREFRONT TC-670
- SUNSHADE : BSD003 (18")
- VERTICAL FIN : OPG600225, OPGPRO9, & OPGPRO10 (18")
- GLASS : 1" GLASS
- Q'TY : 1 SET

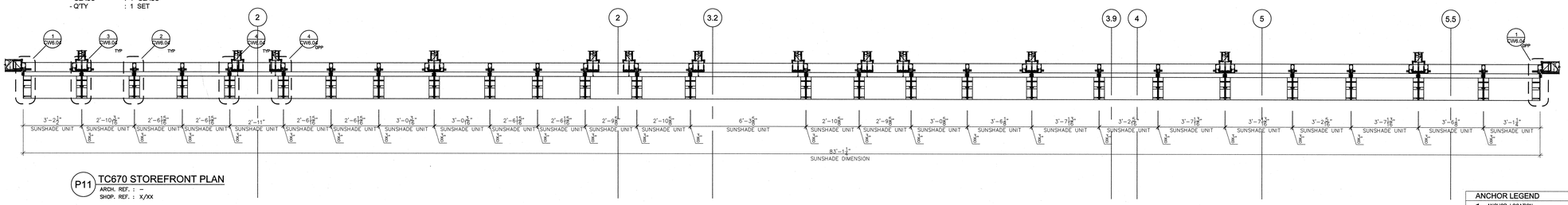

P11 TC670 STOREFRONT PLAN
ARCH. REF. : –
SHOP. REF. : X/XX

ANCHOR LEGEND
- ANCHOR LOCATION
- DEAD LOAD ANCHOR
- WIND LOAD ANCHOR

GLASS LEGEND
- EXTERIOR: 1" INSULATED GLASS UNIT SOLAR CONTROL LOW-E INSULATED GLASS UNIT BASIS OF DESIGN PPG INDUSTRIES
- TEMPERED GLASS

HPI architecture
www.hpiarchitecture.com
115 22nd street
Newport Beach, CA 92663
o: 949. 675. 6442

CONSULTANTS

arcadia

REGISTERED PROFESSIONAL ENGINEER
RAFAL TOSKI
NO. 55793
EXP. 12-31-19
STRUCTURAL
STATE OF CALIFORNIA
AUG 30 2018

SEALS / APPROVALS

LICENSED ARCHITECT
NO. C-17820
AUG 30 2018
STATE OF CALIFORNIA

IDENTIFICATION STAMP
DIV. OF THE STATE ARCHITECT
FILE: 30-C2
A# 04-116810
AC — FLS — SS TY
DATE AUG 31 2018

PROJECT TITLE

JOHNSON STUDENT CENTER
INCREMENT 2
1530 W 17TH ST SANTA ANA CA 92706

RANCHO SANTIAGO
Community College District

SUBMITTALS

#	DATE	DESCRIPTION
	08/13/2018	DSA FINAL SUBMITTAL

PROJECT IDENTIFICATION Project Number

THESE DRAWINGS ORIGINALLY CREATED IN AUTODESK REVIT V. 2016 U.O.N.

THE ORIGINAL SIZE OF THIS SHEET IS 30" X 42".

DRAWN BY RM

CHECKED BY -

THESE DRAWINGS AND SPECIFICATIONS ARE THE PROPERTY AND COPYRIGHT OF THE ARCHITECT AND SHALL NOT BE USED ON ANY OTHER PROJECT WITHOUT THE WRITTEN AGREEMENT OF THE ARCHITECT. DRAWINGS, WITHOUT WRITTEN AGREEMENT, NO DESIGNS ON THE DRAWINGS, WITHOUT WRITTEN AGREEMENT WITH THE ARCHITECT.

© HILL PARTNERSHIP INC. 2017

SHEET TITLE

TC670 STOREFRONT ELEVATIONS

SHEET NUMBER

CW2.05

DSA FINAL SUBMITTAL

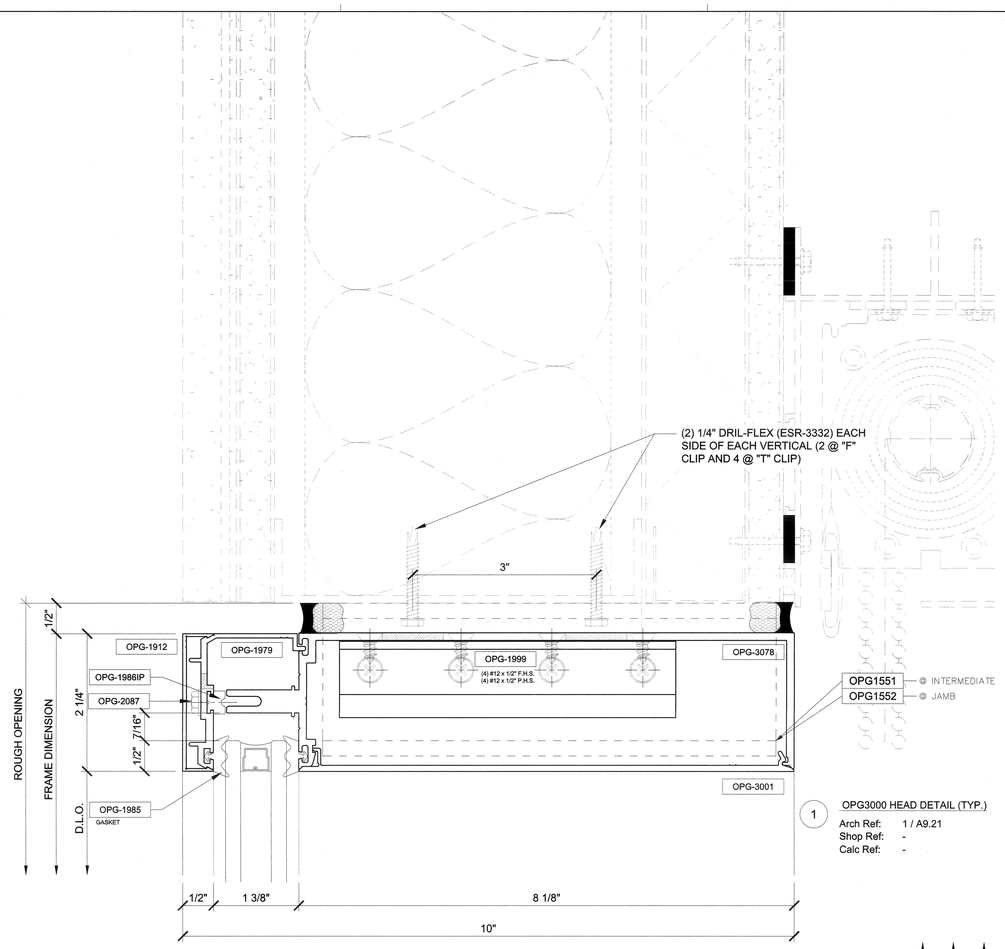

1 OPG3000 HEAD DETAIL (TYP.)

Arch Ref: 1 / A9.21
Shop Ref: -
Calc Ref: -

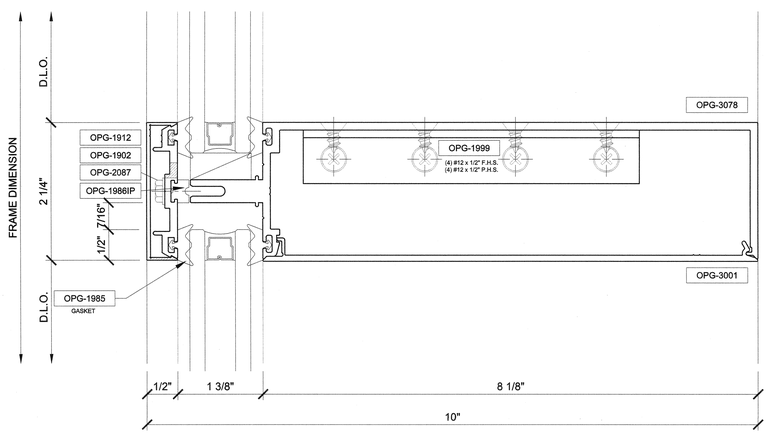

2 OPG3000 INTERMEDIATE DETAIL (TYP.)

Arch Ref: 21 / A9.21
Shop Ref: -
Calc Ref: -

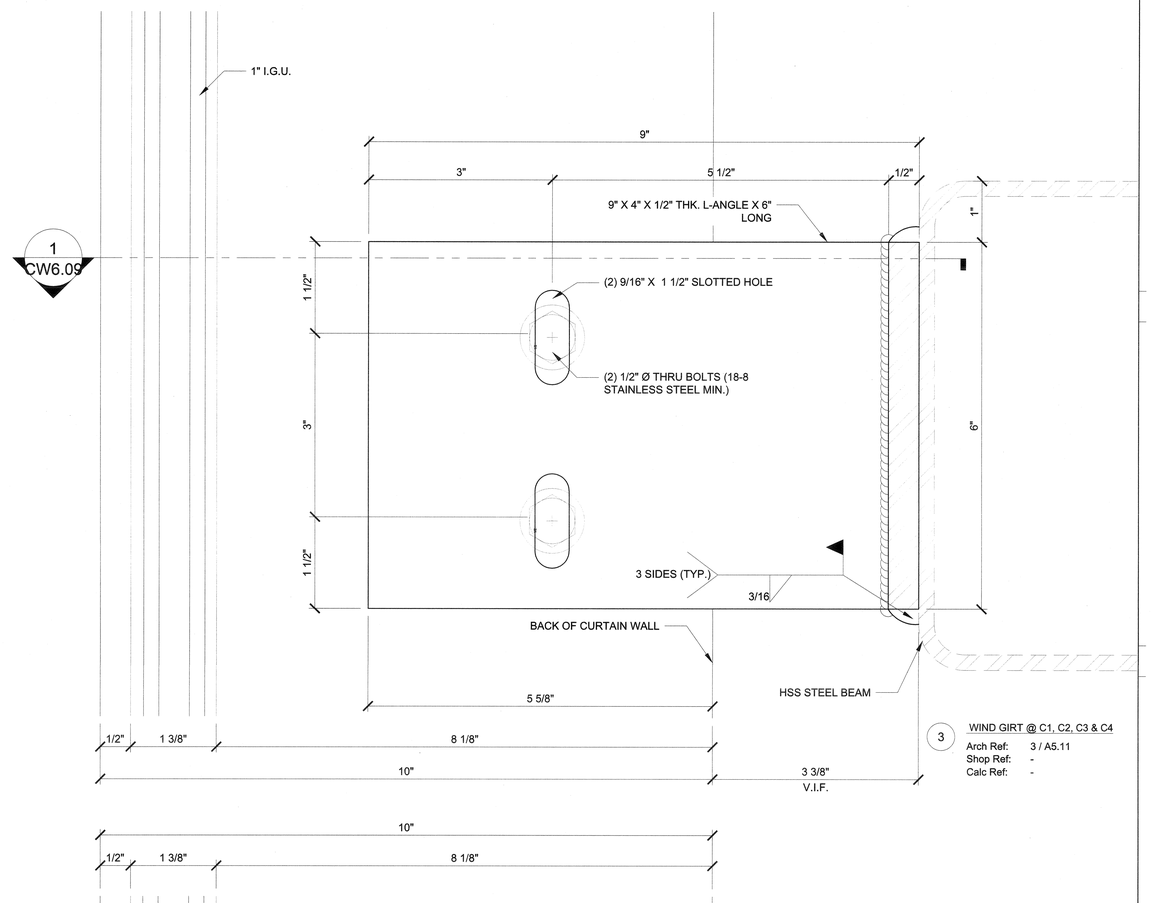

3 WIND GIRT @ C1, C2, C3 & C4

Arch Ref: 3 / A5.11
Shop Ref: -
Calc Ref: -

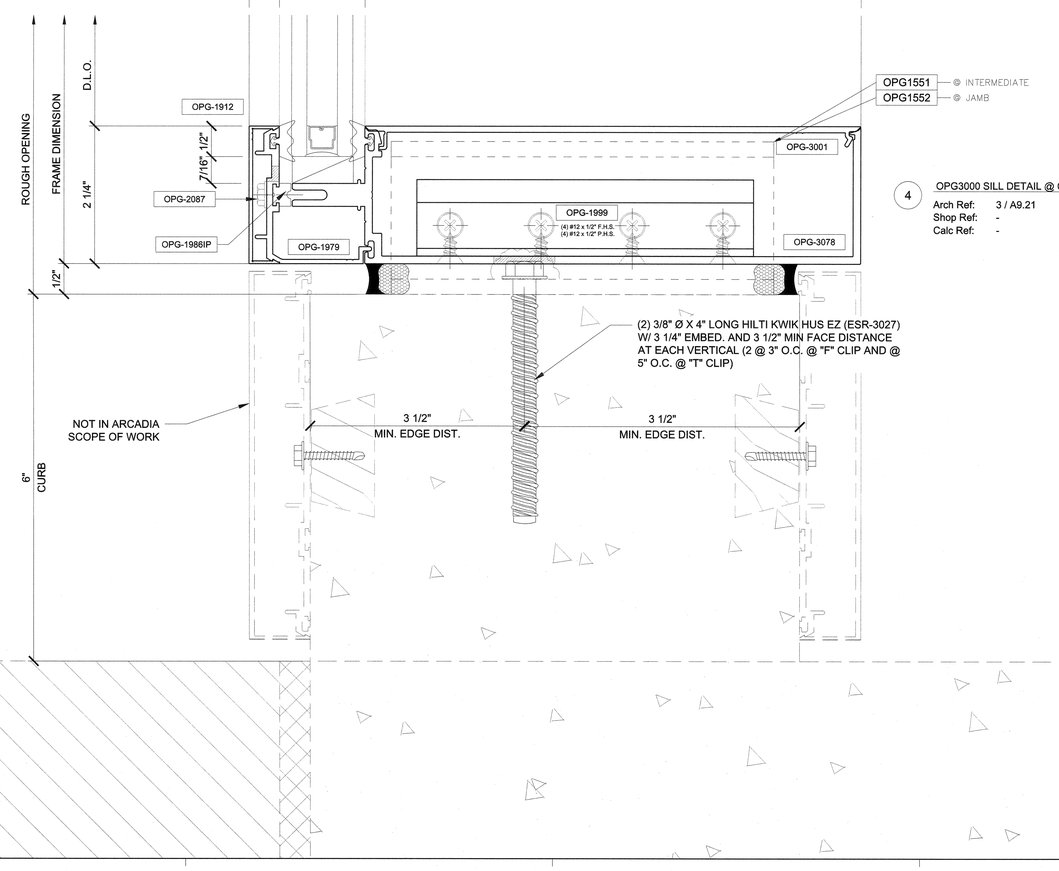

4 OPG3000 SILL DETAIL @ CURB (TYP.)

Arch Ref: 3 / A9.21
Shop Ref: -
Calc Ref: -

HPI architecture
www.hpiarchitecture.com
115 22nd street
Newport Beach, CA 92663
o: 949. 675. 6442

CONSULTANTS

arcadia

REGISTERED PROFESSIONAL ENGINEER
SAM JOSEPH ELIAS
NO. 55733
EXP. 12-31-19
STRUCTURAL
STATE OF CALIFORNIA
AUG 30 2018

SEALS / APPROVALS

LICENSED ARCHITECT
NO. 11560
STATE OF CALIFORNIA
AUG 30 2018

IDENTIFICATION STAMP
DIV. OF THE STATE ARCHITECT
FILE: 30-C2
A# 04-116810
AC — FLS — SS TY
DATE AUG 31 2018

PROJECT TITLE

JOHNSON STUDENT CENTER
INCREMENT 2
1530 W 17TH ST SANTA ANA CA 92706

RANCHO SANTIAGO
Community College District

SUBMITTALS

#	DATE	DESCRIPTION
	08/13/2018	DSA FINAL SUBMITTAL

PROJECT IDENTIFICATION Project Number

THESE DRAWINGS ORIGINALLY CREATED IN AUTODESK REVIT V. 2016 U.O.N.

THE ORIGINAL SIZE OF THIS SHEET IS 30" X 42".

DRAWN BY RM

CHECKED BY -

THESE DRAWINGS AND SPECIFICATIONS ARE THE PROPERTY AND COPYRIGHT OF THE ARCHITECT AND SHALL NOT BE USED ON ANY OTHER PROJECT OR LOCATIONS EXCEPT AS DESCRIBED ON THE DRAWINGS, WITHOUT WRITTEN AGREEMENT WITH THE ARCHITECT.

© HILL PARTNERSHIP INC. 2017

SHEET TITLE

OPG3000
CURTAIN WALL
HORIZONTAL DETAILS

SHEET NUMBER

CW5.01

DSA FINAL SUBMITTAL

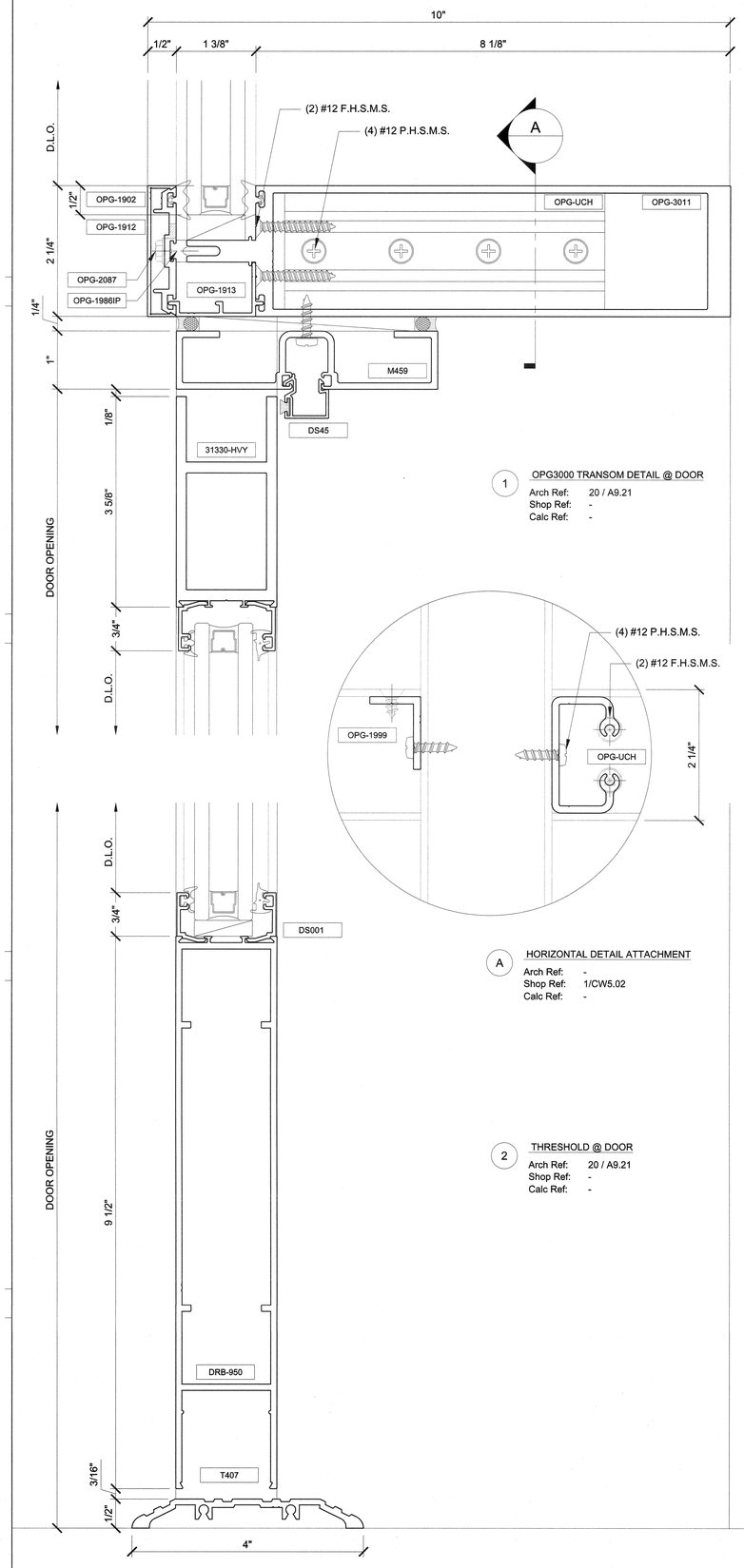

1 OPG3000 TRANSOM DETAIL @ DOOR
Arch Ref: 20 / A9.21
Shop Ref: -
Calc Ref: -

A HORIZONTAL DETAIL ATTACHMENT
Arch Ref: -
Shop Ref: 1/CW5.02
Calc Ref: -

2 THRESHOLD @ DOOR
Arch Ref: 20 / A9.21
Shop Ref: -
Calc Ref: -

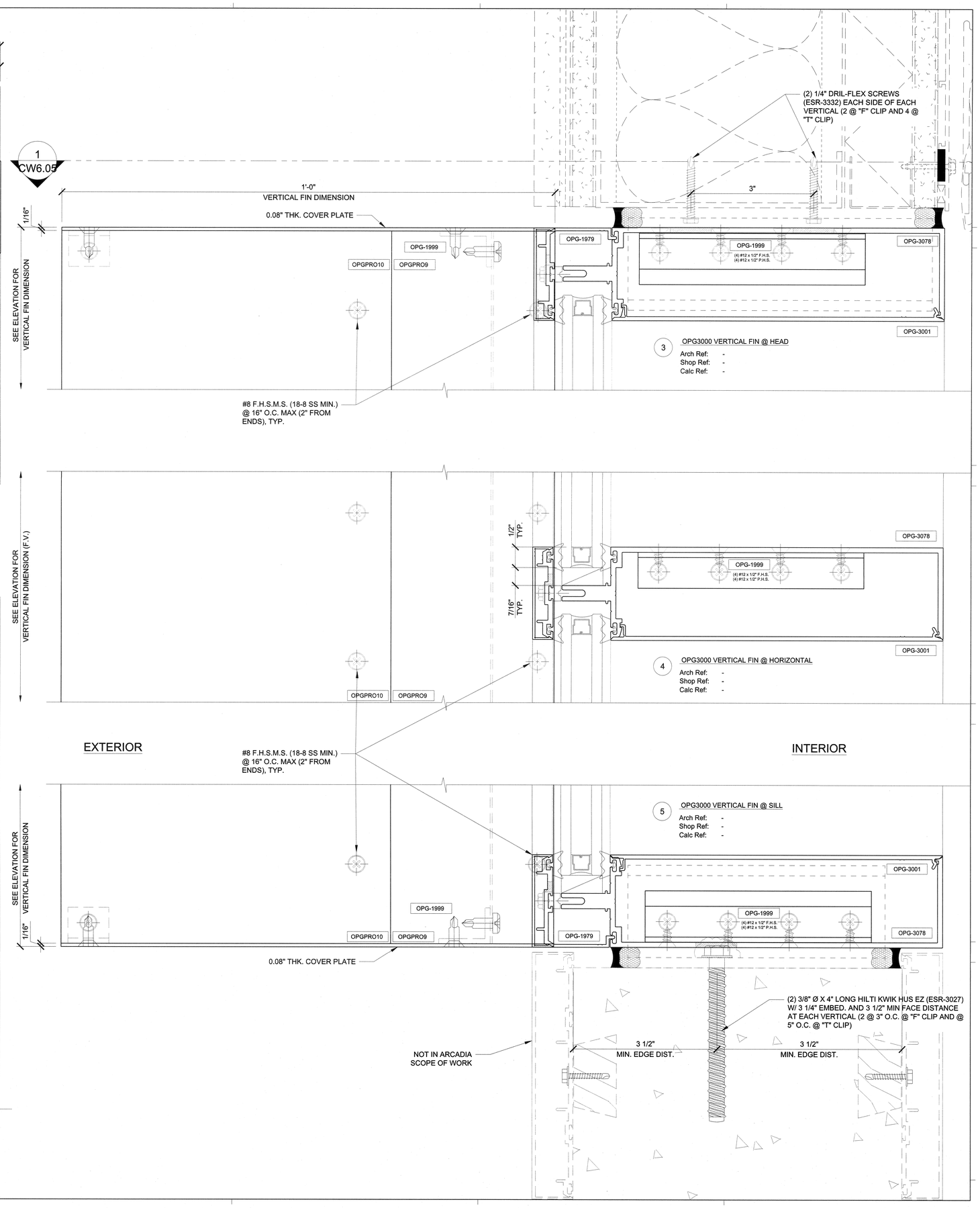

3 OPG3000 VERTICAL FIN @ HEAD
Arch Ref: -
Shop Ref: -
Calc Ref: -

4 OPG3000 VERTICAL FIN @ HORIZONTAL
Arch Ref: -
Shop Ref: -
Calc Ref: -

5 OPG3000 VERTICAL FIN @ SILL
Arch Ref: -
Shop Ref: -
Calc Ref: -

HPI architecture
www.hpiarchitecture.com
115 22nd street
Newport Beach, CA 92663
o: 949. 675. 6442

CONSULTANTS

arcadia

REGISTERED PROFESSIONAL ENGINEER
RAMIN TOSAN
NO. 55733
EXP. 12-31-19
STRUCTURAL
STATE OF CALIFORNIA
AUG 30 2018

SEALS / APPROVALS

LICENSED ARCHITECT
NO. C-17820
AUG 30 2018
STATE OF CALIFORNIA

IDENTIFICATION STAMP
DIV. OF THE STATE ARCHITECT
FILE: 30-C2
A# 04-116810
AC — FLS — SS TJ
DATE AUG 31 2018

PROJECT TITLE
JOHNSON STUDENT CENTER
INCREMENT 2
1530 W 17TH ST SANTA ANA CA 92706

RANCHO SANTIAGO
Community College District

SUBMITTALS

#	DATE	DESCRIPTION
	08/13/2018	DSA FINAL SUBMITTAL

PROJECT IDENTIFICATION Project Number

THESE DRAWINGS ORIGINALLY CREATED IN AUTODESK REVIT V. 2016 U.O.N.

THE ORIGINAL SIZE OF THIS SHEET IS 30" X 42".

DRAWN BY RM

CHECKED BY -

THESE DRAWINGS AND SPECIFICATIONS ARE THE PROPERTY AND COPYRIGHT OF THE ARCHITECT AND SHALL NOT BE USED ON ANY OTHER PROJECT OR LOCATIONS EXCEPT AS DESCRIBED ON THE DRAWINGS, WITHOUT WRITTEN AGREEMENT WITH THE ARCHITECT.

© HILL PARTNERSHIP INC. 2017

SHEET TITLE
OPG3000
CURTAIN WALL
HORIZONTAL DETAILS

SHEET NUMBER
CW5.02

DSA FINAL SUBMITTAL

2
CW6.04

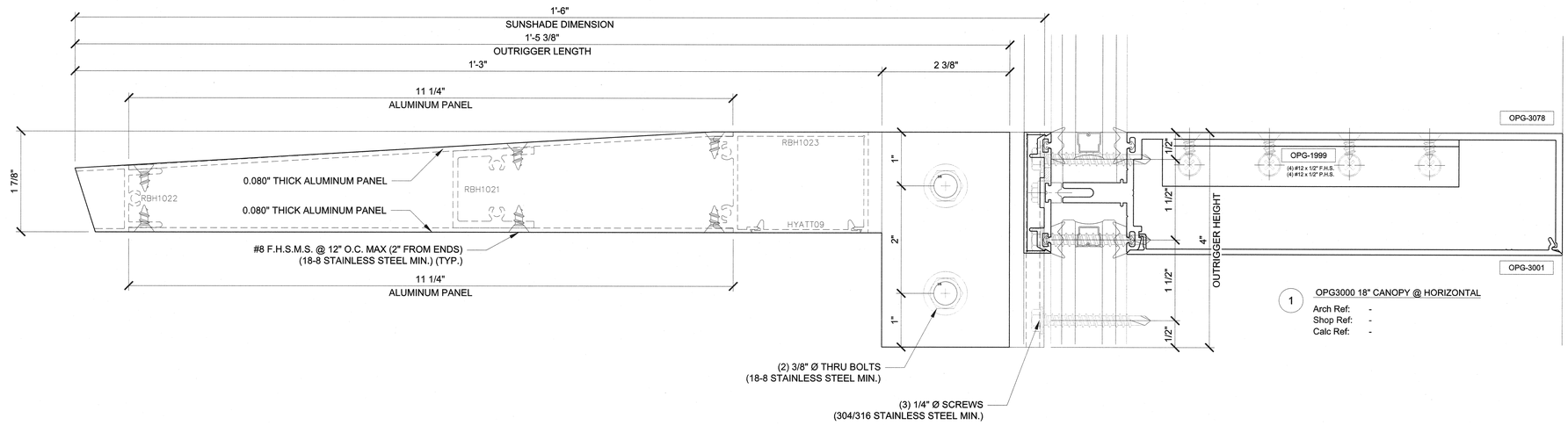

1 OPG3000 18" CANOPY @ HORIZONTAL

Arch Ref: -
Shop Ref: -
Calc Ref: -

2
CW6.04

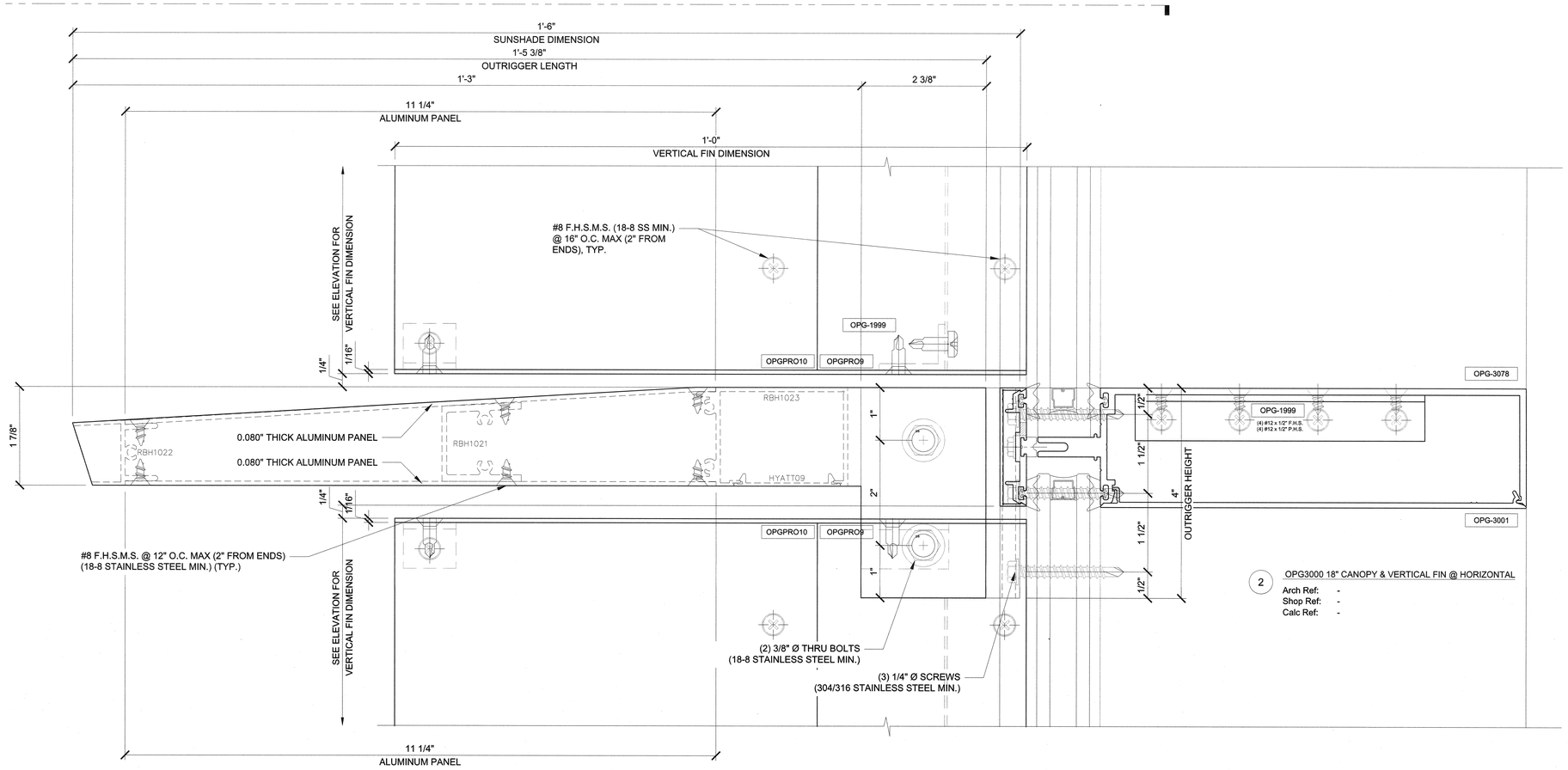

2 OPG3000 18" CANOPY & VERTICAL FIN @ HORIZONTAL

Arch Ref: -
Shop Ref: -
Calc Ref: -

HPI architecture
www.hpiarchitecture.com
115 22nd street
Newport Beach, CA 92663
o: 949. 675. 6442

CONSULTANTS

arcadia

REGISTERED PROFESSIONAL ENGINEER
SANTOSH PARIKH
NO. S5733
EXP. 12-31-19
STRUCTURAL
STATE OF CALIFORNIA
AUG 30 2018

SEALS / APPROVALS

REGISTERED PROFESSIONAL ENGINEER
LANDSCAPE ARCHITECT
NO. 1 11520
STATE OF CALIFORNIA
AUG 30 2018

IDENTIFICATION STAMP
DIV. OF THE STATE ARCHITECT
FILE: 30-C2
A# 04-116810
AC — FLS — SS ty
DATE AUG 31 2018

PROJECT TITLE

JOHNSON STUDENT CENTER
INCREMENT 2
1530 W 17TH ST SANTA ANA CA 92706

RANCHO SANTIAGO
Community College District

SUBMITTALS

#	DATE	DESCRIPTION
	08/13/2018	DSA FINAL SUBMITTAL

PROJECT IDENTIFICATION Project Number

THESE DRAWINGS ORIGINALLY CREATED IN AUTODESK REVIT V. 2016 U.O.N.

THE ORIGINAL SIZE OF THIS SHEET IS 30" X 42".

DRAWN BY RM

CHECKED BY -

THESE DRAWINGS AND SPECIFICATIONS ARE THE PROPERTY AND COPYRIGHT OF THE ARCHITECT AND SHALL NOT BE USED ON ANY OTHER PROJECT OR LOCATIONS EXCEPT AS DESCRIBED ON THE DRAWINGS, WITHOUT WRITTEN AGREEMENT WITH THE ARCHITECT.

© HILL PARTNERSHIP INC. 2017

SHEET TITLE

OPG3000
CURTAIN WALL
HORIZONTAL DETAILS

SHEET NUMBER

CW5.03

DSA FINAL SUBMITTAL

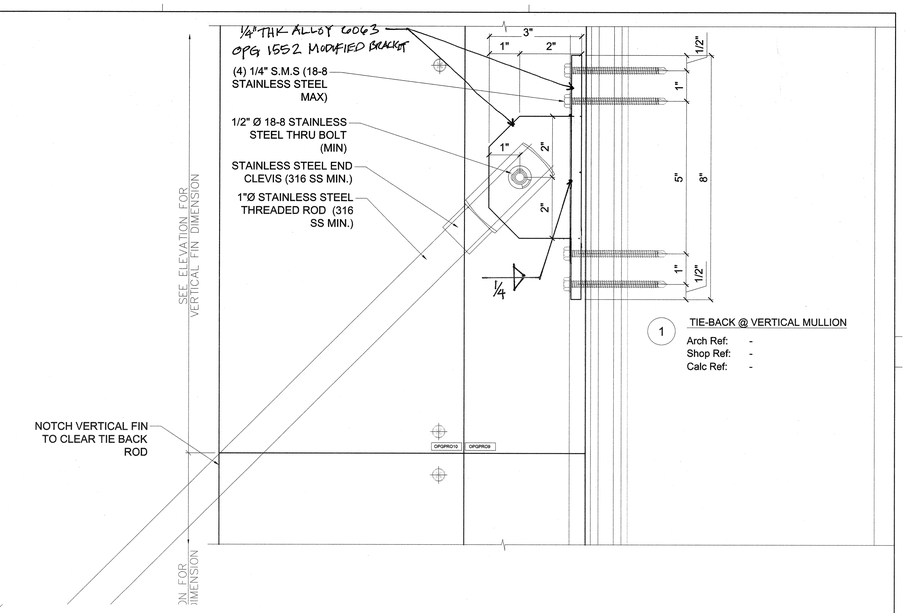

1 TIE-BACK @ VERTICAL MULLION
Arch Ref: -
Shop Ref: -
Calc Ref: -

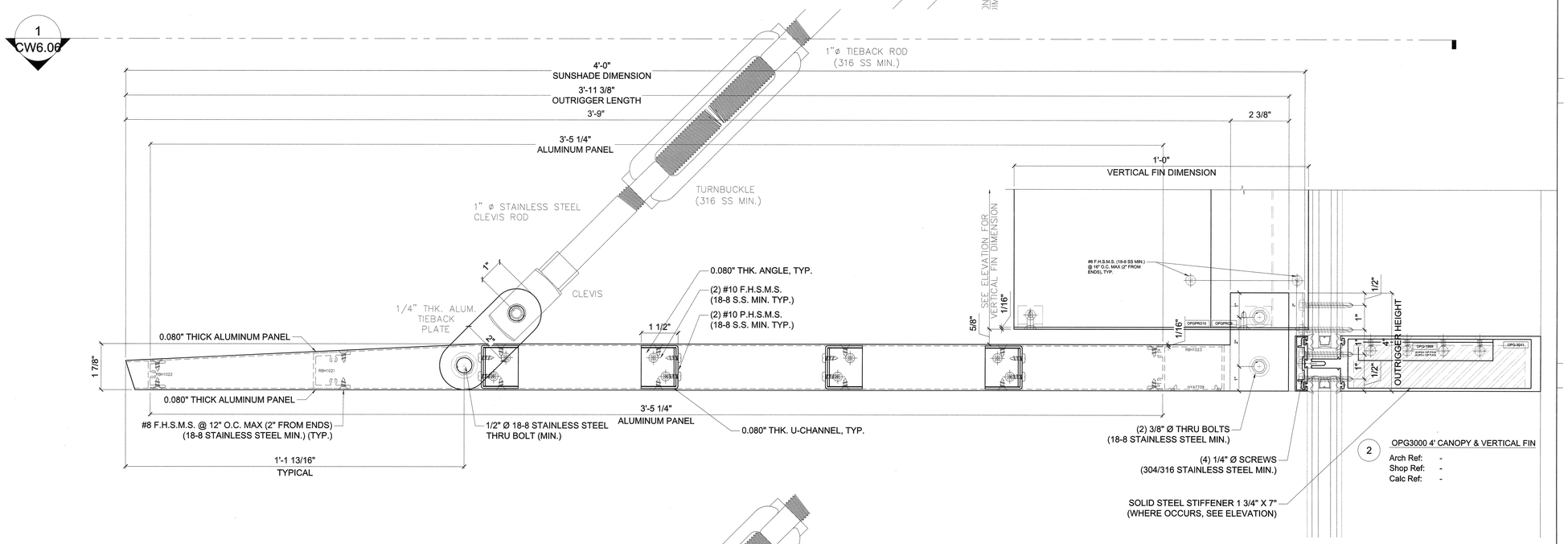

2 OPG3000 4' CANOPY & VERTICAL FIN
Arch Ref: -
Shop Ref: -
Calc Ref: -

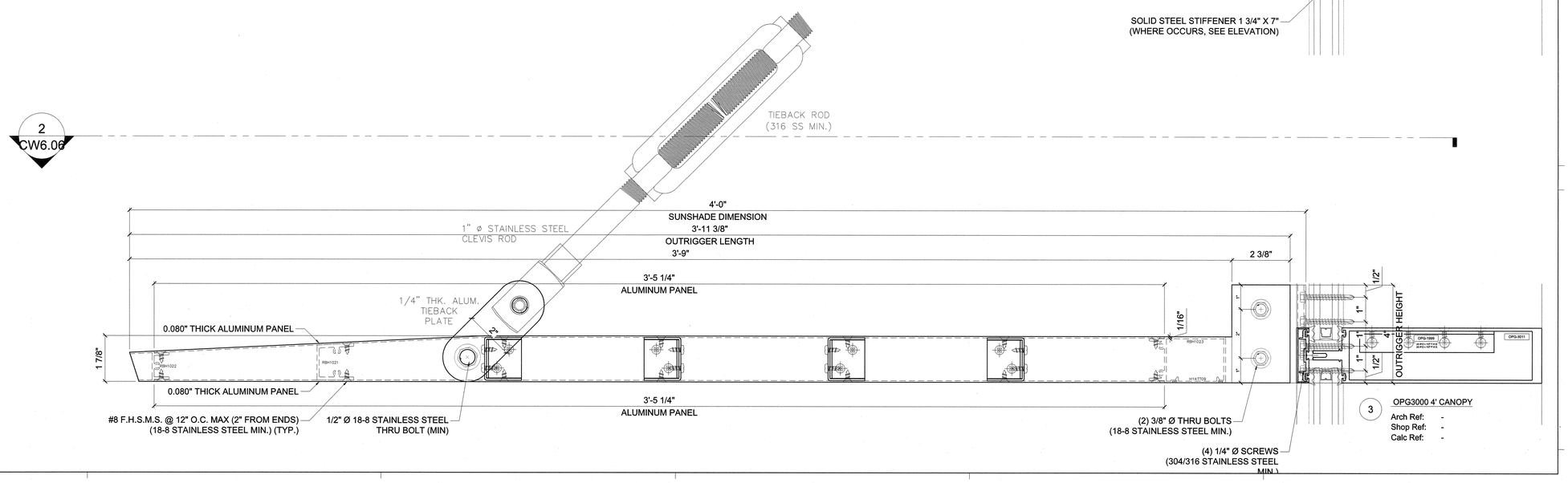

3 OPG3000 4' CANOPY
Arch Ref: -
Shop Ref: -
Calc Ref: -

HPI architecture
www.hpiarchitecture.com
115 22nd street
Newport Beach, CA 92663
o: 949. 675. 6442

CONSULTANTS

arcadia

SEALS / APPROVALS

REGISTERED PROFESSIONAL ENGINEER — RAMIN ROSEN — NO. S5733 — EXP. 12-31-19 — STRUCTURAL — STATE OF CALIFORNIA
AUG 30 2018

LICENSED ARCHITECT — NO. C-17820 — STATE OF CALIFORNIA
AUG 30 2018

IDENTIFICATION STAMP
DIV. OF THE STATE ARCHITECT
FILE: 30-C2
A# 04-116810
AC — FLS — SS TY
DATE AUG 31 2018

PROJECT TITLE
JOHNSON STUDENT CENTER
INCREMENT 2
1530 W 17TH ST SANTA ANA CA 92706

RANCHO SANTIAGO Community College District

SUBMITTALS

#	DATE	DESCRIPTION
	08/13/2018	DSA FINAL SUBMITTAL

PROJECT IDENTIFICATION Project Number

THESE DRAWINGS ORIGINALLY CREATED IN AUTODESK REVIT V. 2016 U.O.N.

THE ORIGINAL SIZE OF THIS SHEET IS 30" X 42".

DRAWN BY RM

CHECKED BY -

THESE DRAWINGS AND SPECIFICATIONS ARE THE PROPERTY AND COPYRIGHT OF THE ARCHITECT AND SHALL NOT BE USED ON ANY OTHER PROJECT OR LOCATIONS EXCEPT AS DESCRIBED ON THE DRAWINGS, WITHOUT WRITTEN AGREEMENT WITH THE ARCHITECT.

© HILL PARTNERSHIP INC. 2017

SHEET TITLE
OPG3000
CURTAIN WALL
HORIZONTAL DETAILS

SHEET NUMBER
CW5.04

DSA FINAL SUBMITTAL

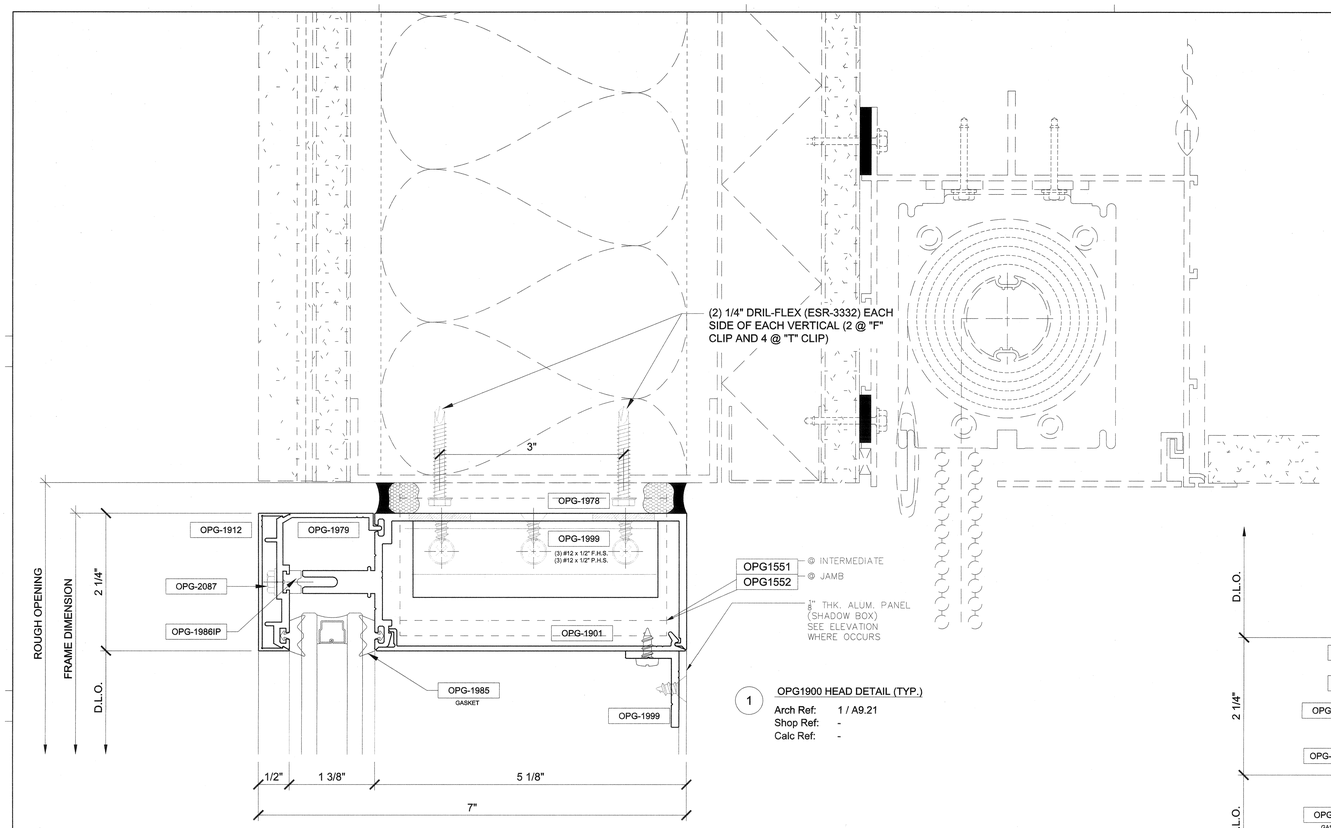

1 OPG1900 HEAD DETAIL (TYP.)
Arch Ref: 1 / A9.21
Shop Ref: -
Calc Ref: -

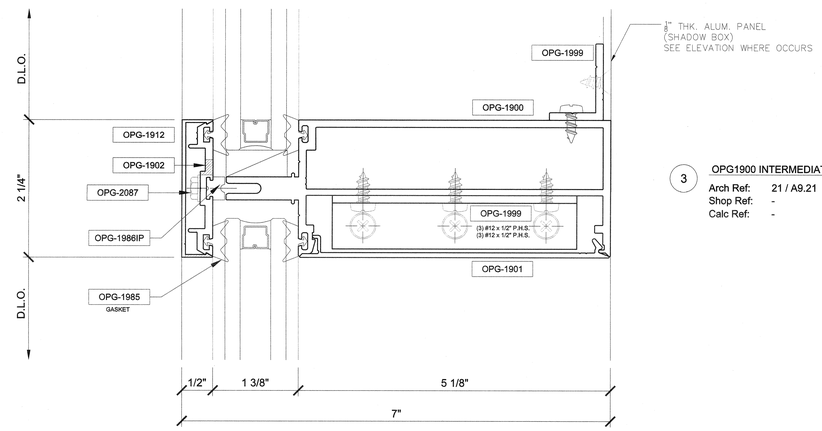

3 OPG1900 INTERMEDIATE DETAIL (TYP.)
Arch Ref: 21 / A9.21
Shop Ref: -
Calc Ref: -

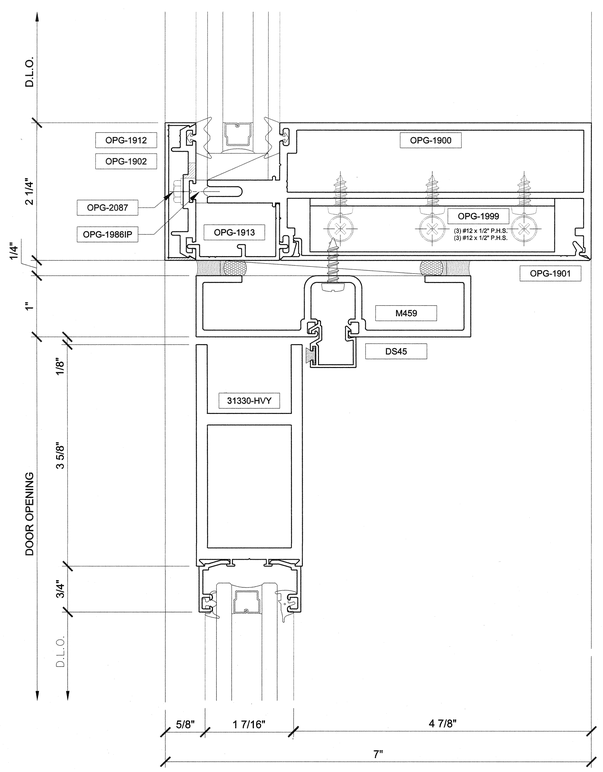

2 OPG1900 TRANSOM DETAIL @ DOOR
Arch Ref: 20 / A9.21
Shop Ref: -
Calc Ref: -

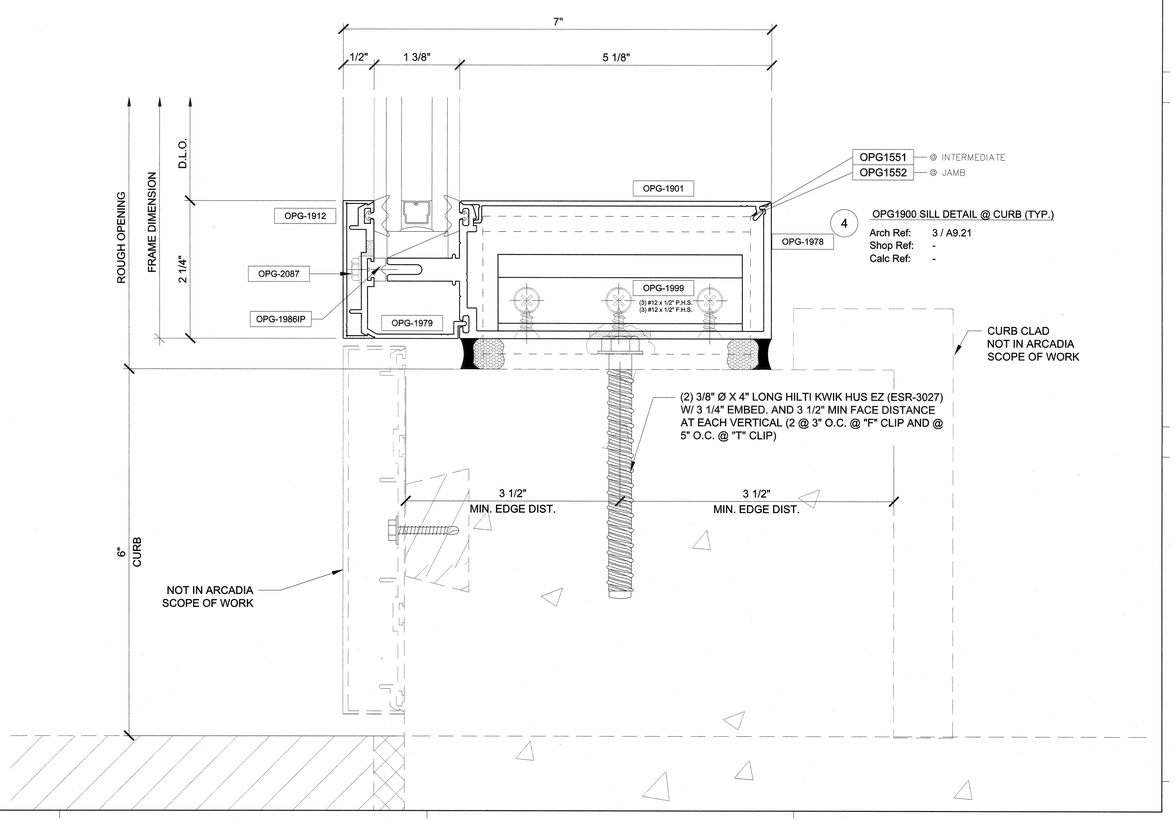

4 OPG1900 SILL DETAIL @ CURB (TYP.)
Arch Ref: 3 / A9.21
Shop Ref: -
Calc Ref: -

HPI architecture
www.hpiarchitecture.com
115 22nd street
Newport Beach, CA 92663
o: 949. 675. 6442

CONSULTANTS

arcadia

REGISTERED PROFESSIONAL ENGINEER
RAFAL TOSIEK
NO. 55739
EXP. 12-31-19
STRUCTURAL
STATE OF CALIFORNIA
AUG 3 0 2018

SEALS / APPROVALS

LICENSED ARCHITECT
NO. C-17520
STATE OF CALIFORNIA

IDENTIFICATION STAMP
DIV. OF THE STATE ARCHITECT
FILE: 30-C2
A# 0 4 - 1 1 6 8 1 0
AC — FLS — SS
DATE AUG 3 1 2018

PROJECT TITLE

JOHNSON STUDENT CENTER
INCREMENT 2
1530 W 17TH ST SANTA ANA CA 92706

RANCHO SANTIAGO
Community College District

SUBMITTALS

#	DATE	DESCRIPTION
	08/13/2018	DSA FINAL SUBMITTAL

PROJECT IDENTIFICATION Project Number

THESE DRAWINGS ORIGINALLY CREATED IN AUTODESK REVIT V. 2016 U.O.N.

THE ORIGINAL SIZE OF THIS SHEET IS 30" X 42".

DRAWN BY RM

CHECKED BY -

THESE DRAWINGS AND SPECIFICATIONS ARE THE PROPERTY AND COPYRIGHT OF THE ARCHITECT AND SHALL NOT BE USED ON ANY OTHER PROJECT OR LOCATIONS EXCEPT AS DESCRIBED ON THE DRAWINGS, WITHOUT WRITTEN AGREEMENT WITH THE ARCHITECT.

© HILL PARTNERSHIP INC. 2017

SHEET TITLE

OPG1900
CURTAIN WALL
HORIZONTAL DETAILS

SHEET NUMBER

CW5.05

DSA FINAL SUBMITTAL

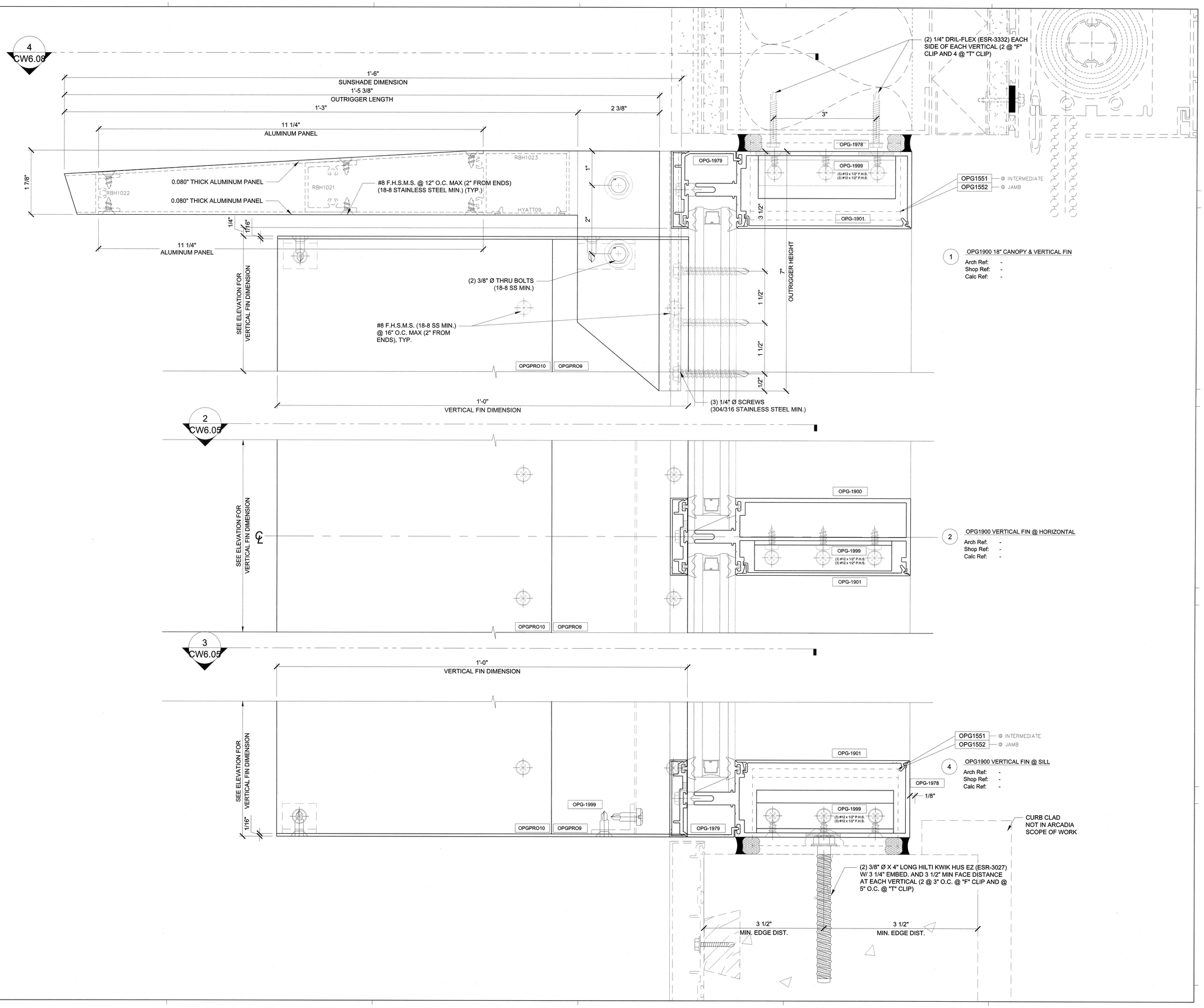

HPI architecture
www.hpiarchitecture.com
115 22nd street
Newport Beach, CA 92663
o: 949. 675. 6442

CONSULTANTS

arcadia

SEALS / APPROVALS

IDENTIFICATION STAMP
DIV. OF THE STATE ARCHITECT
FILE: 30-C2
A# 04-116810
AC — FLS — SS TY
DATE AUG 31 2018

PROJECT TITLE

JOHNSON STUDENT CENTER
INCREMENT 2
1530 W 17TH ST SANTA ANA CA 92706

RANCHO SANTIAGO
Community College District

SUBMITTALS

#	DATE	DESCRIPTION
	08/13/2018	DSA FINAL SUBMITTAL

PROJECT IDENTIFICATION Project Number

THESE DRAWINGS ORIGINALLY CREATED IN AUTODESK REVIT V. 2016 U.O.N.

THE ORIGINAL SIZE OF THIS SHEET IS 30" X 42".

DRAWN BY RM

CHECKED BY -

THESE DRAWINGS AND SPECIFICATIONS ARE THE PROPERTY AND COPYRIGHT OF THE ARCHITECT AND SHALL NOT BE USED ON ANY OTHER PROJECT OR LOCATIONS EXCEPT AS DESCRIBED ON THE DRAWINGS, WITHOUT WRITTEN AGREEMENT WITH THE ARCHITECT.

© HILL PARTNERSHIP INC. 2017

SHEET TITLE

OPG1900
CURTAIN WALL
HORIZONTAL DETAILS

SHEET NUMBER

CW5.06

DSA FINAL SUBMITTAL

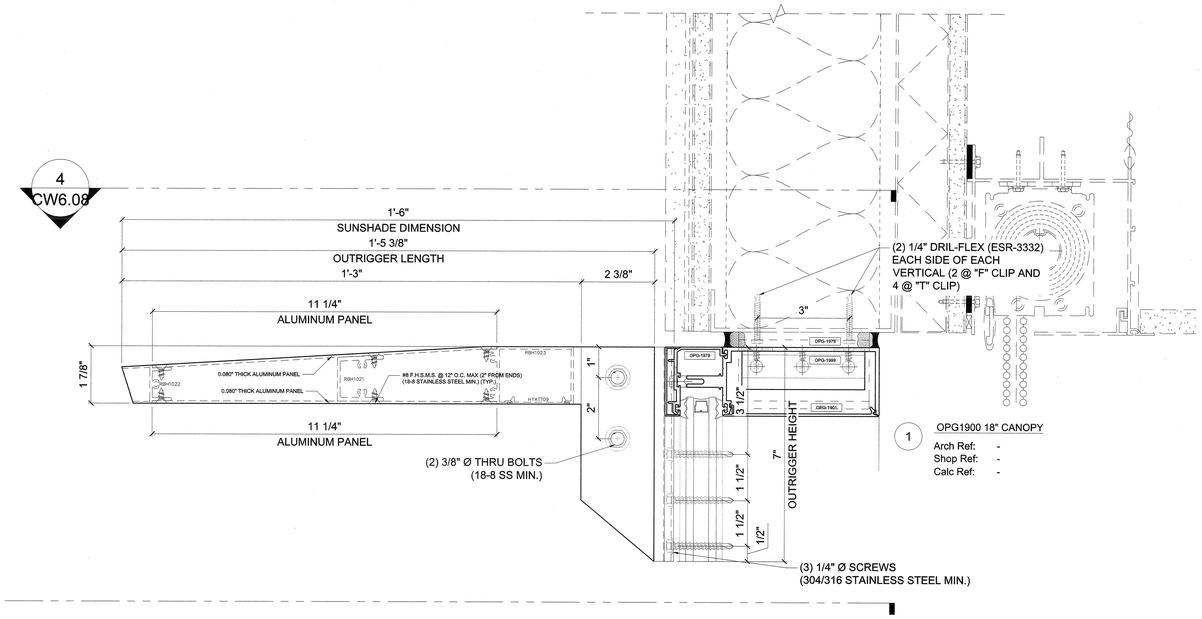

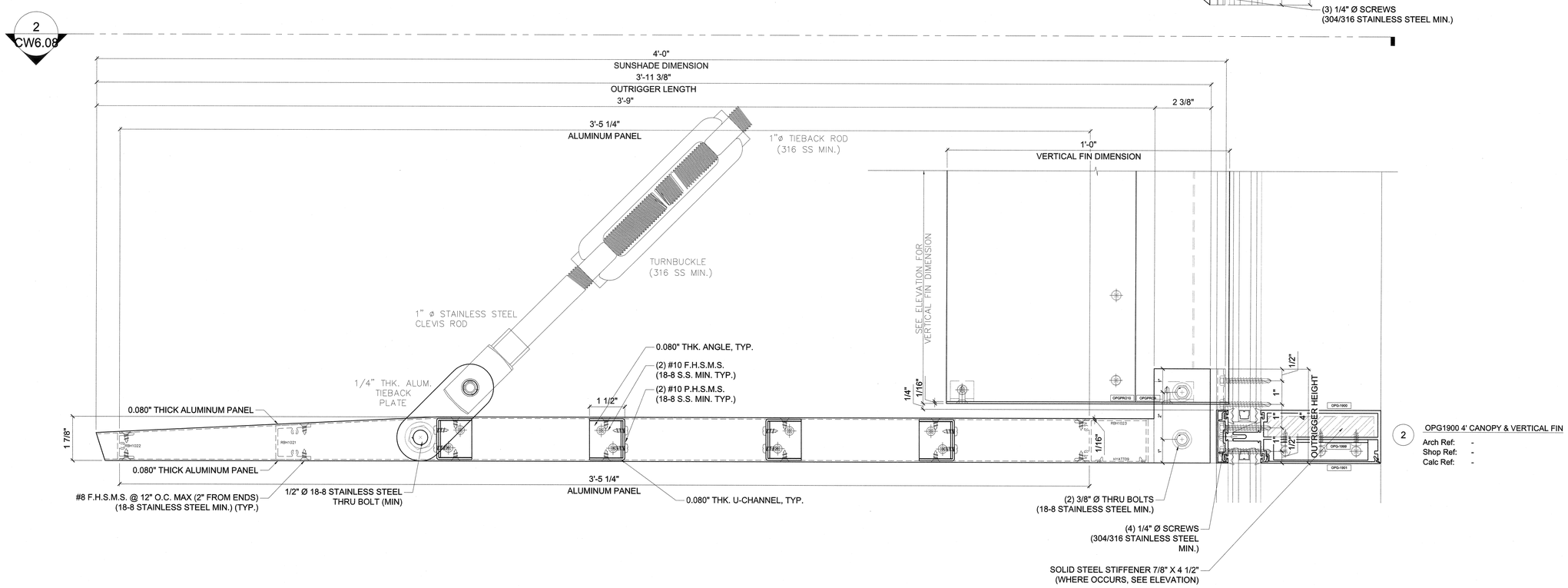

HPI architecture
www.hpiarchitecture.com
115 22nd street
Newport Beach, CA 92663
o: 949. 675. 6442

CONSULTANTS

arcadia

SEALS / APPROVALS

IDENTIFICATION STAMP
DIV. OF THE STATE ARCHITECT
FILE: 30-C2
A# 04-116810
AC — FLS — SS TY
DATE AUG 31 2018

PROJECT TITLE

JOHNSON STUDENT CENTER
INCREMENT 2
1530 W 17TH ST SANTA ANA CA 92706

RANCHO SANTIAGO
Community College District

SUBMITTALS

#	DATE	DESCRIPTION
	08/13/2018	DSA FINAL SUBMITTAL

PROJECT IDENTIFICATION Project Number

THESE DRAWINGS ORIGINALLY CREATED IN AUTODESK REVIT V. 2016 U.O.N.

THE ORIGINAL SIZE OF THIS SHEET IS 30" X 42".

DRAWN BY RM

CHECKED BY -

THESE DRAWINGS AND SPECIFICATIONS ARE THE PROPERTY AND COPYRIGHT OF THE ARCHITECT AND SHALL NOT BE USED ON ANY OTHER PROJECT OR LOCATIONS EXCEPT AS DESCRIBED ON THE DRAWINGS, WITHOUT WRITTEN AGREEMENT WITH THE ARCHITECT.

© HILL PARTNERSHIP INC. 2017

SHEET TITLE

OPG1900
CURTAIN WALL
HORIZONTAL DETAILS

SHEET NUMBER

CW5.07

DSA FINAL SUBMITTAL

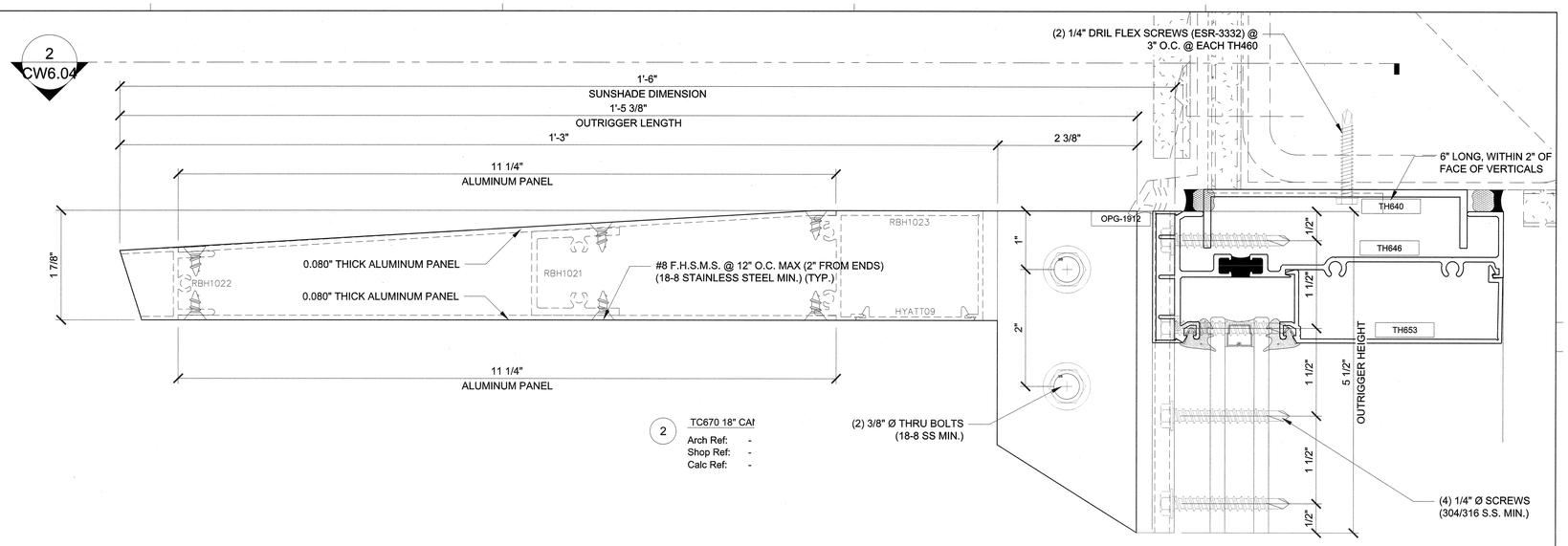

2 TC670 18" CAN
Arch Ref: -
Shop Ref: -
Calc Ref: -

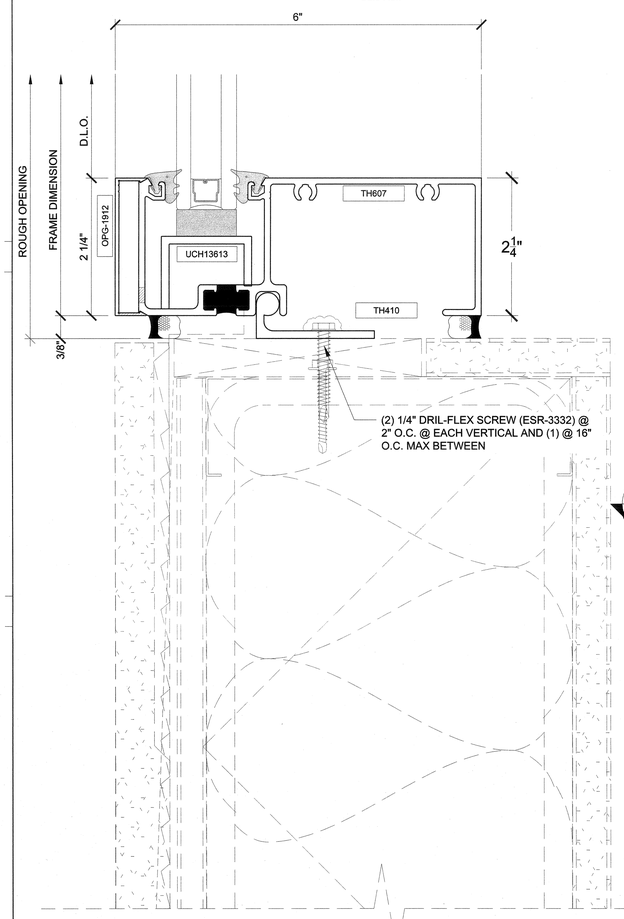

1 TC670 SILL DETAIL (TYP)
Arch Ref: 3 / A9.22
Shop Ref: -
Calc Ref: -

3 TC670 18" CANOPY & VERTICAL FIN @ HEAD
Arch Ref: -
Shop Ref: -
Calc Ref: -

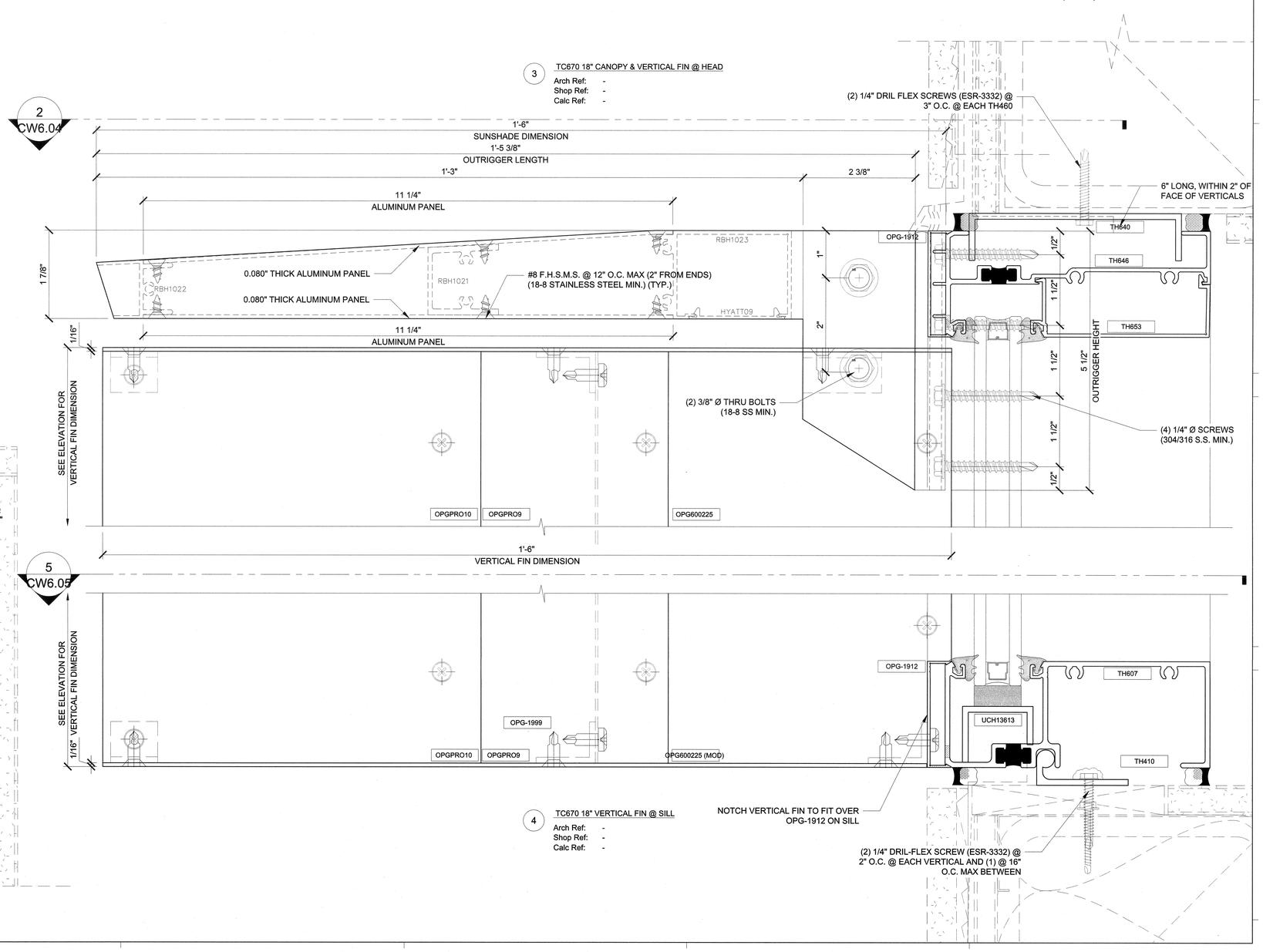

4 TC670 18" VERTICAL FIN @ SILL
Arch Ref: -
Shop Ref: -
Calc Ref: -

HPI architecture
www.hpiarchitecture.com
115 22nd street
Newport Beach, CA 92663
o: 949. 675. 6442

CONSULTANTS

arcadia

REGISTERED PROFESSIONAL ENGINEER
SANDY JOSEPH SHAFIEI
NO. 55733
EXP. 12-31-18
STRUCTURAL
STATE OF CALIFORNIA
AUG 30 2018

SEALS / APPROVALS

LICENSED LANDSCAPE ARCHITECT
NO. 5120
EXP. 12-31-18
STATE OF CALIFORNIA

IDENTIFICATION STAMP
DIV. OF THE STATE ARCHITECT
FILE: 30-C2
A# 04-116810
AC — FLS — SS TJ
DATE AUG 31 2018

PROJECT TITLE
JOHNSON STUDENT CENTER
INCREMENT 2
1530 W 17TH ST SANTA ANA CA 92706

RANCHO SANTIAGO
Community College District

SUBMITTALS

#	DATE	DESCRIPTION
	08/13/2018	DSA FINAL SUBMITTAL

PROJECT IDENTIFICATION Project Number

THESE DRAWINGS ORIGINALLY CREATED IN AUTODESK REVIT V. 2016 U.O.N.

THE ORIGINAL SIZE OF THIS SHEET IS 30" X 42".

DRAWN BY RM

CHECKED BY -

THESE DRAWINGS AND SPECIFICATIONS ARE THE PROPERTY AND COPYRIGHT OF THE ARCHITECT AND SHALL NOT BE USED ON ANY OTHER PROJECT OR ADDITION AND SHALL NOT BE REPRODUCED ON THE DRAWINGS, WITHOUT WRITTEN AGREEMENT WITH THE ARCHITECT.

© HILL PARTNERSHIP INC. 2017

SHEET TITLE
TC670
STOREFRONT
HORIZONTAL DETAILS

SHEET NUMBER
CW5.08

DSA FINAL SUBMITTAL

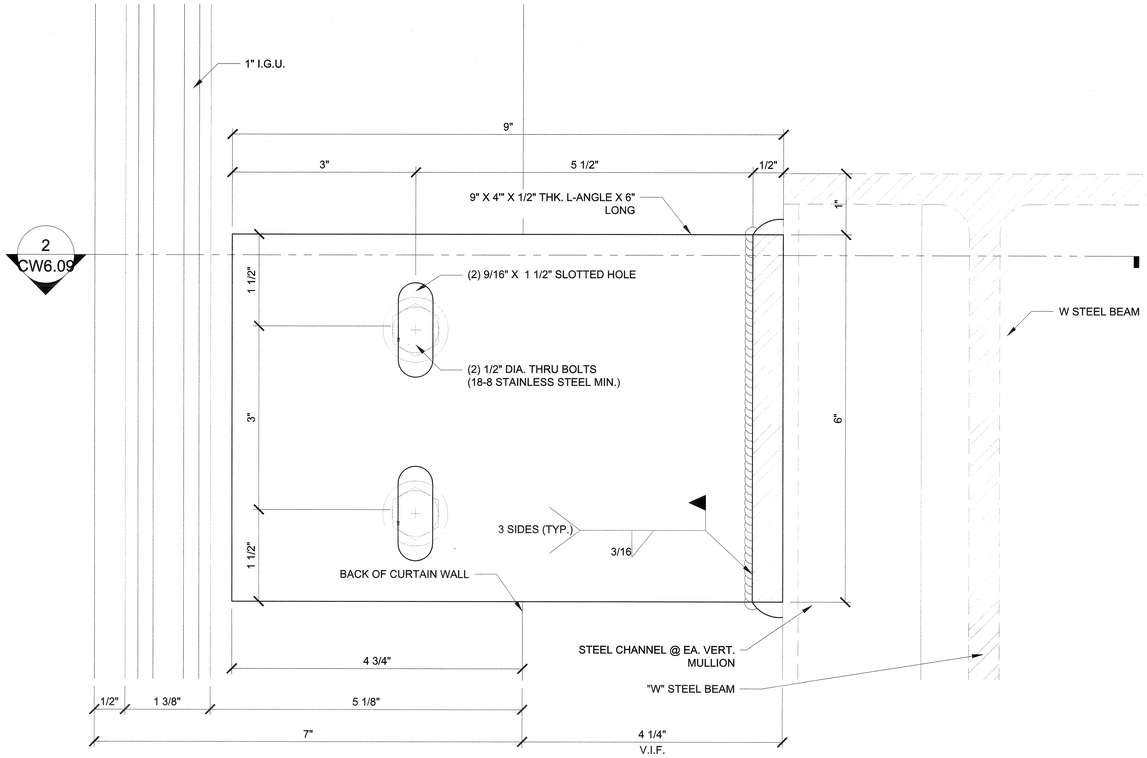

1 WIND GIRT @ C8

Arch Ref: 7 / A9.21
Shop Ref: -
Calc Ref: -

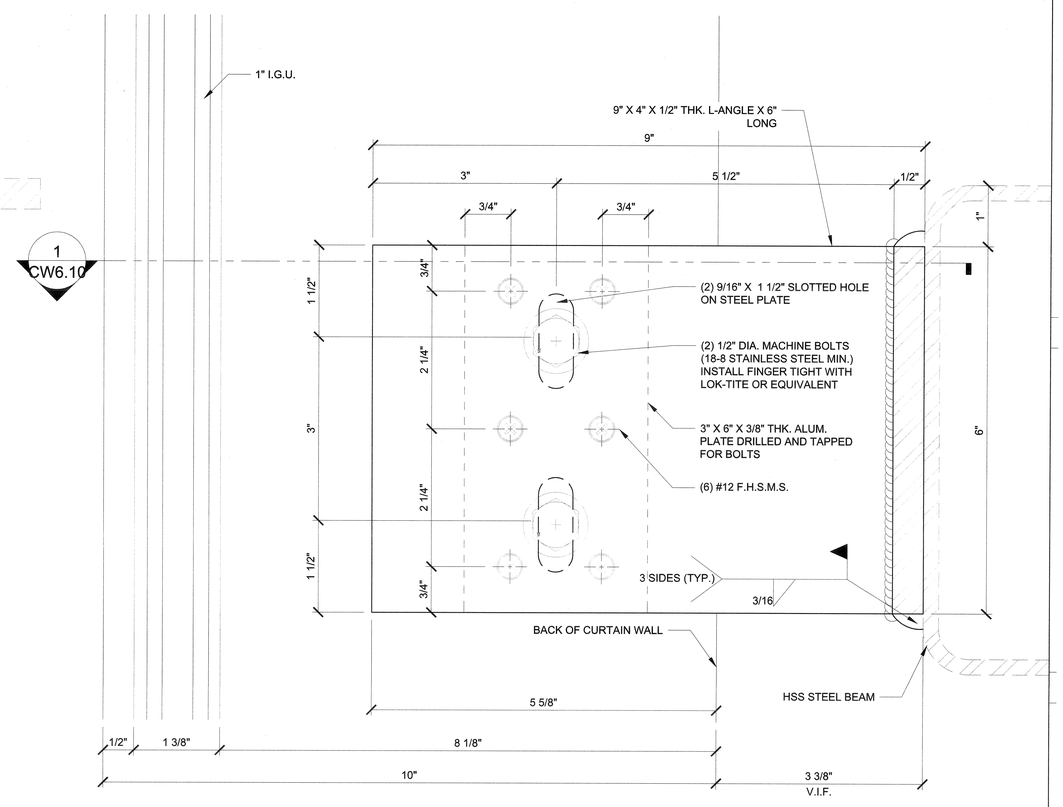

3 JAMB WIND GIRT @ C1, C2, C3 & C4

Arch Ref: 3 / A5.11
Shop Ref: -
Calc Ref: -

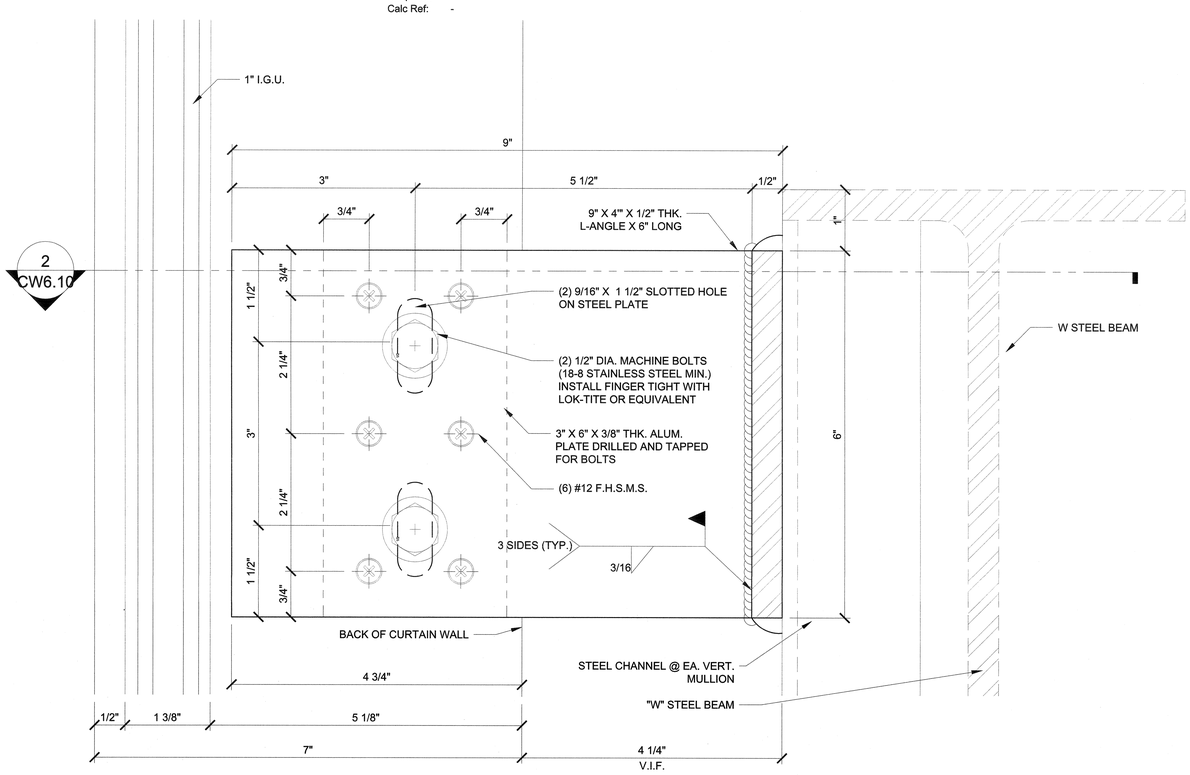

2 JAMB WIND GIRT @ C8

Arch Ref: 7 / A9.21
Shop Ref: -
Calc Ref: -

HPI architecture
www.hpiarchitecture.com
115 22nd street
Newport Beach, CA 92663
o: 949. 675. 6442

CONSULTANTS

arcadia

SEALS / APPROVALS

IDENTIFICATION STAMP
DIV. OF THE STATE ARCHITECT
FILE: 30-C2
A# 04-116810
AC — FLS — SS
DATE AUG 31 2018

PROJECT TITLE

JOHNSON STUDENT CENTER
INCREMENT 2
1530 W 17TH ST SANTA ANA CA 92706

RANCHO SANTIAGO Community College District

SUBMITTALS

#	DATE	DESCRIPTION
	08/13/2018	DSA FINAL SUBMITTAL

PROJECT IDENTIFICATION Project Number

THESE DRAWINGS ORIGINALLY CREATED IN AUTODESK REVIT V. 2016 U.O.N.

THE ORIGINAL SIZE OF THIS SHEET IS 30" X 42".

DRAWN BY RM

CHECKED BY -

THESE DRAWINGS AND SPECIFICATIONS ARE THE PROPERTY AND COPYRIGHT OF THE ARCHITECT AND SHALL NOT BE USED ON ANY OTHER PROJECT OR LOCATIONS EXCEPT AS DESCRIBED ON THE DRAWINGS, WITHOUT WRITTEN AGREEMENT WITH THE ARCHITECT.

© HILL PARTNERSHIP INC. 2017

SHEET TITLE

OPG1900
CURTAIN WALL
HORIZONTAL DETAILS

SHEET NUMBER

CW5.09

DSA FINAL SUBMITTAL

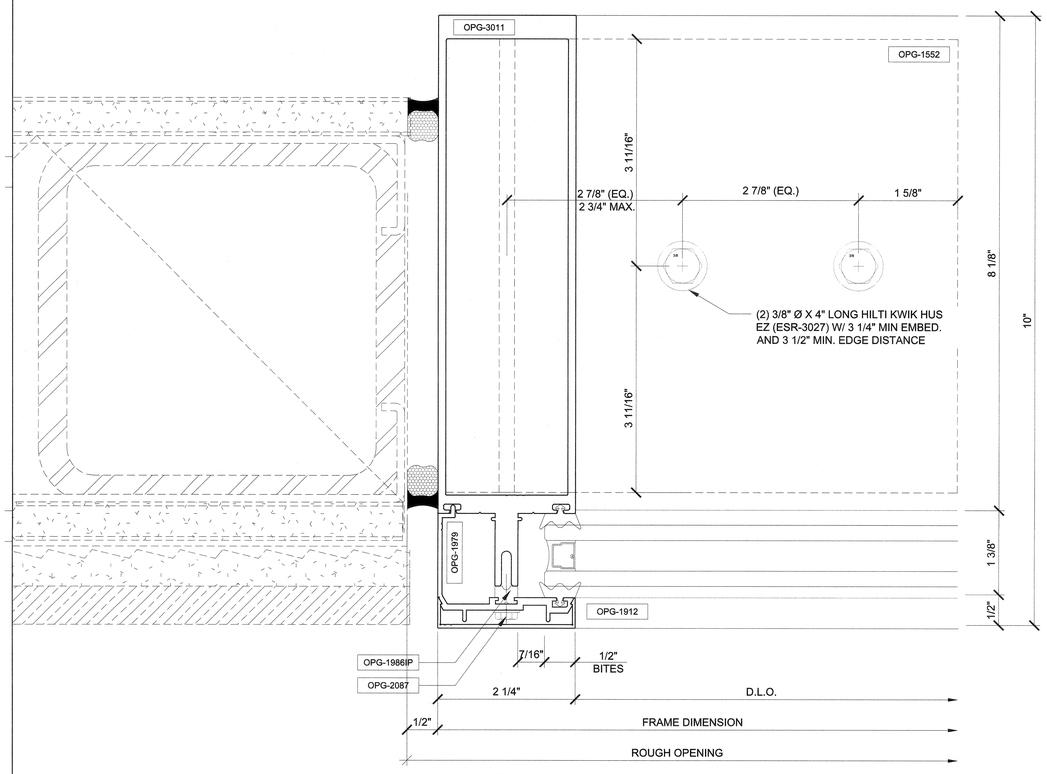

1 JAMB DETAIL
Arch Ref: 16 / A9.21
Shop Ref: -
Calc Ref: -

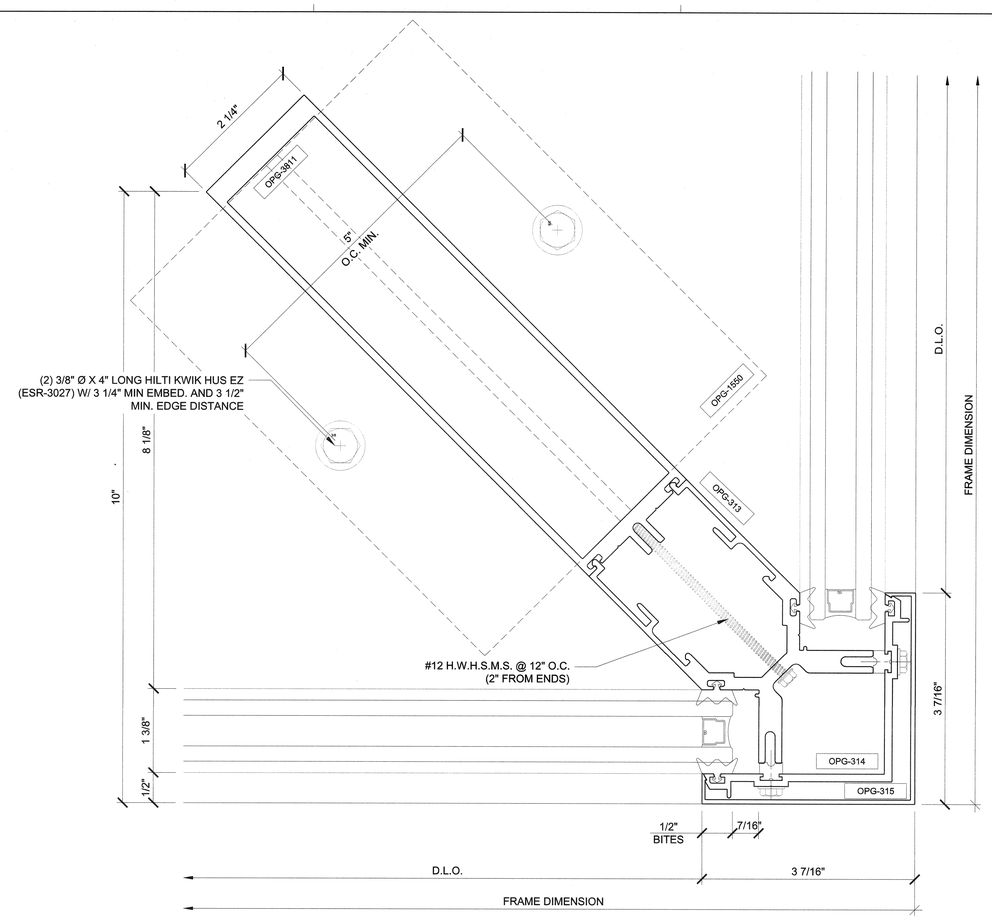

2 CORNER DETAIL
Arch Ref: 5 / A9.21
Shop Ref: -
Calc Ref: -

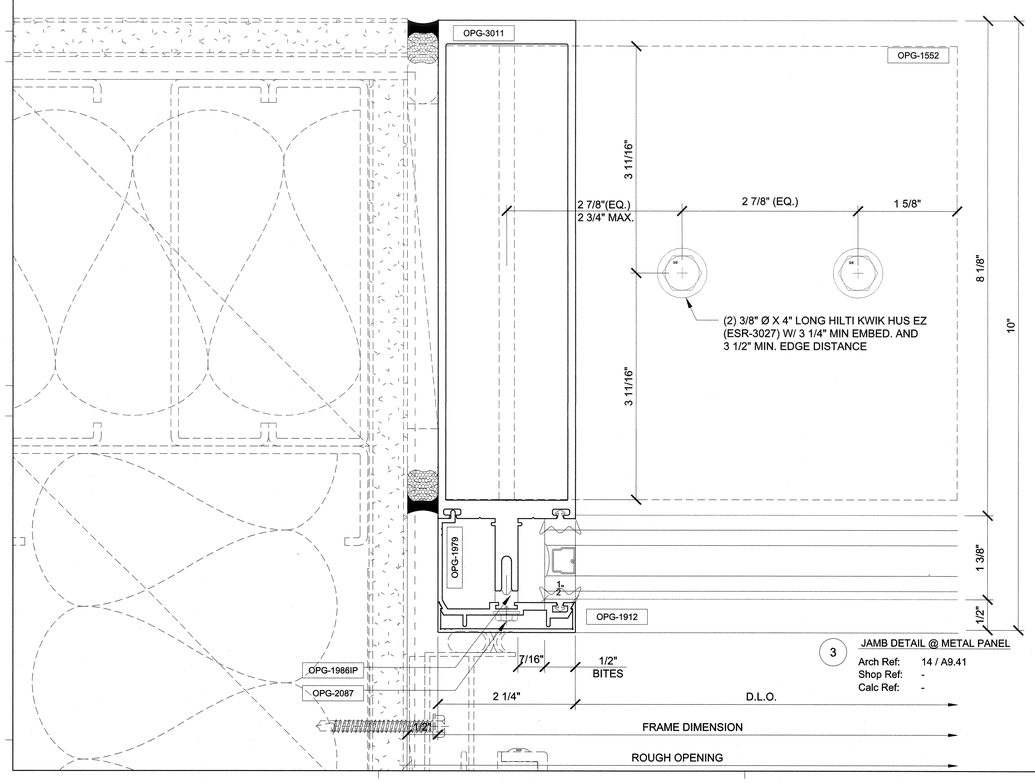

3 JAMB DETAIL @ METAL PANEL
Arch Ref: 14 / A9.41
Shop Ref: -
Calc Ref: -

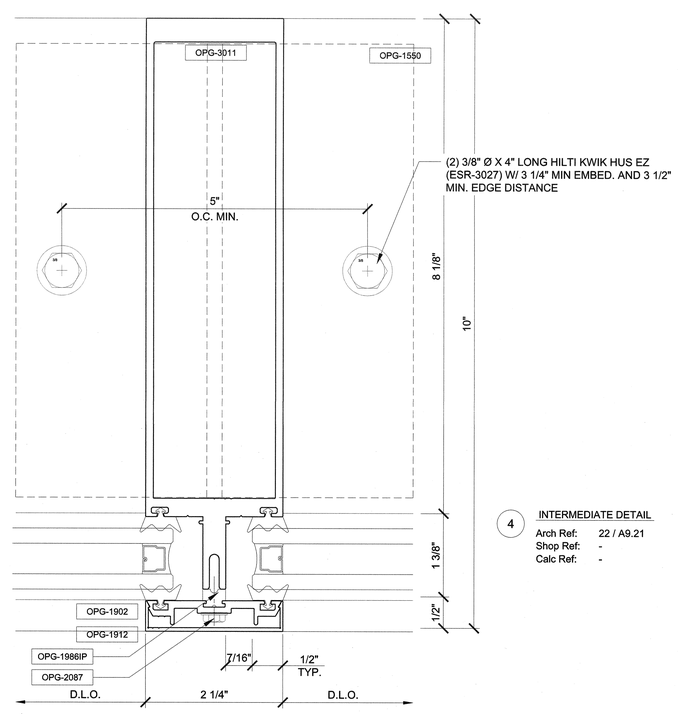

4 INTERMEDIATE DETAIL
Arch Ref: 22 / A9.21
Shop Ref: -
Calc Ref: -

HPI architecture
www.hpiarchitecture.com
115 22nd street
Newport Beach, CA 92663
o: 949. 675. 6442

CONSULTANTS

arcadia

REGISTERED PROFESSIONAL ENGINEER JOSEPH ALEXANDER HUMBER III NO. 55783 EXP. 12-31-19 STRUCTURAL STATE OF CALIFORNIA
AUG 30 2018

SEALS / APPROVALS

REGISTERED PROFESSIONAL ENGINEER JOHN CLAYTON HILL NO. 17605 STRUCTURAL STATE OF CALIFORNIA

IDENTIFICATION STAMP
DIV. OF THE STATE ARCHITECT
FILE: 30-C2
A# 04 - 116810
AC — FLS — SS
DATE AUG 31 2018

PROJECT TITLE
JOHNSON STUDENT CENTER
INCREMENT 2
1530 W 17TH ST SANTA ANA CA 92706

RANCHO SANTIAGO Community College District

SUBMITTALS

#	DATE	DESCRIPTION
	08/13/2018	DSA FINAL SUBMITTAL

PROJECT IDENTIFICATION Project Number

THESE DRAWINGS ORIGINALLY CREATED IN AUTODESK REVIT V. 2016 U.O.N.

THE ORIGINAL SIZE OF THIS SHEET IS 30" X 42".

DRAWN BY RM

CHECKED BY -

THESE DRAWINGS AND SPECIFICATIONS ARE THE PROPERTY AND COPYRIGHT OF THE ARCHITECT AND SHALL NOT BE USED ON ANY OTHER PROJECT OR LOCATIONS EXCEPT AS DESCRIBED ON THE DRAWINGS, WITHOUT WRITTEN AGREEMENT WITH THE ARCHITECT.

© HILL PARTNERSHIP INC. 2017

SHEET TITLE
OPG3000
CURTAIN WALL
VERTICAL DETAILS

SHEET NUMBER
CW6.01

DSA FINAL SUBMITTAL

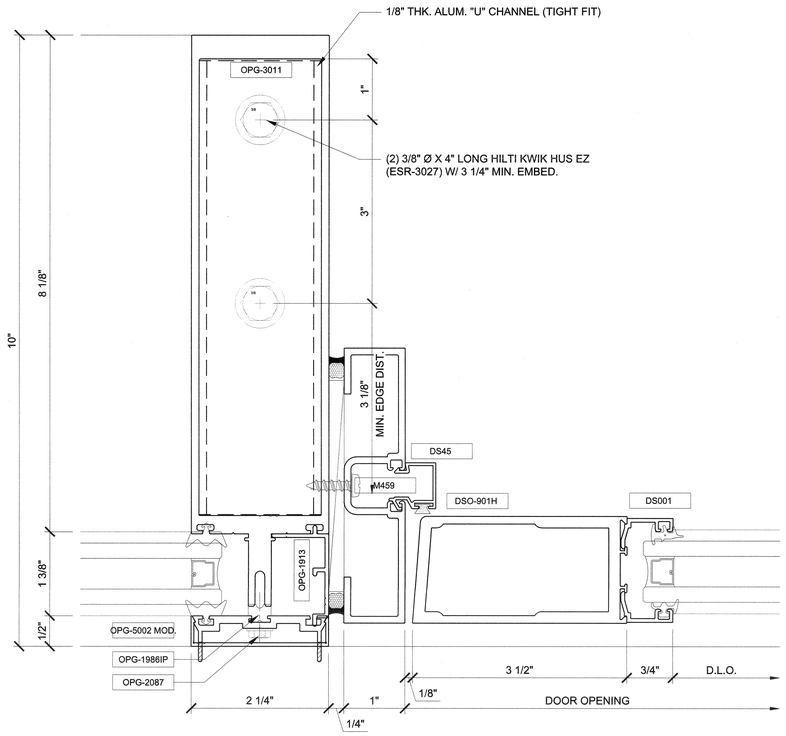

1 INTERMEDATE DETAIL @ DOOR

Arch Ref: 18 / A9.21
Shop Ref: -
Calc Ref: -

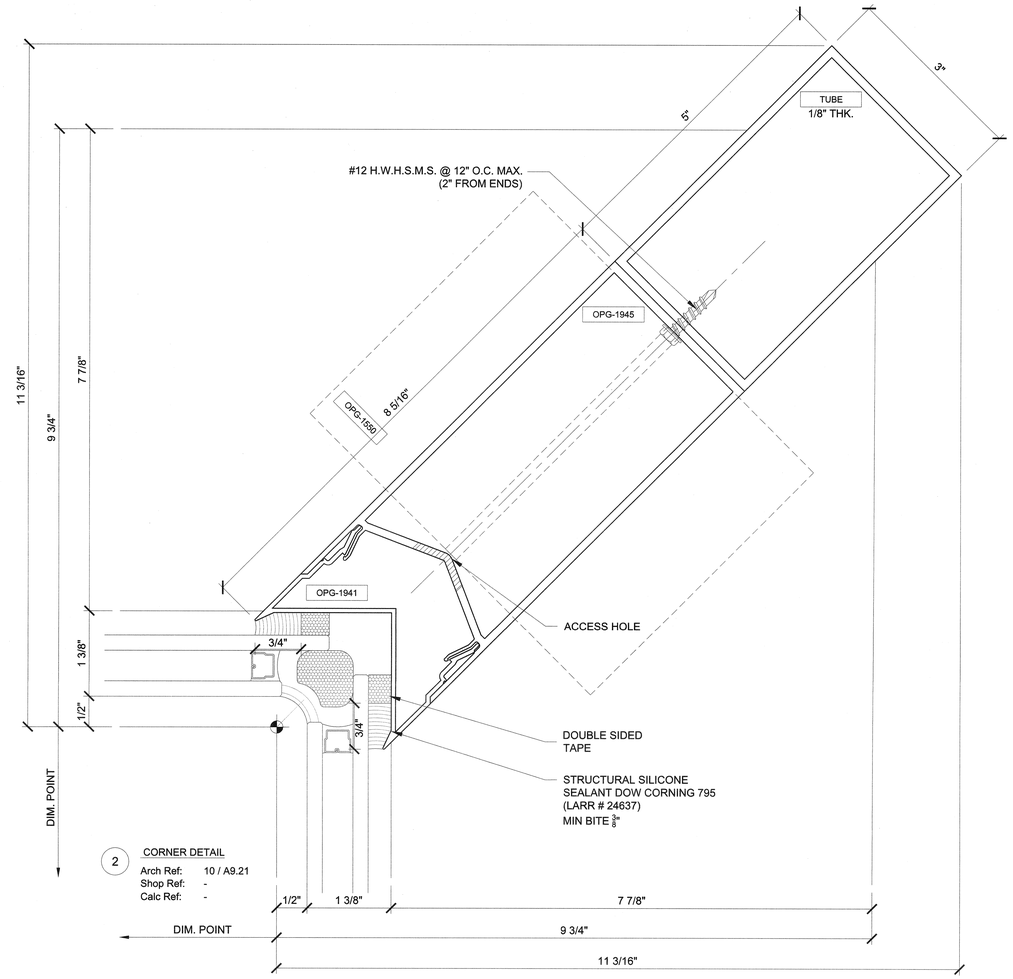

2 CORNER DETAIL

Arch Ref: 10 / A9.21
Shop Ref: -
Calc Ref: -

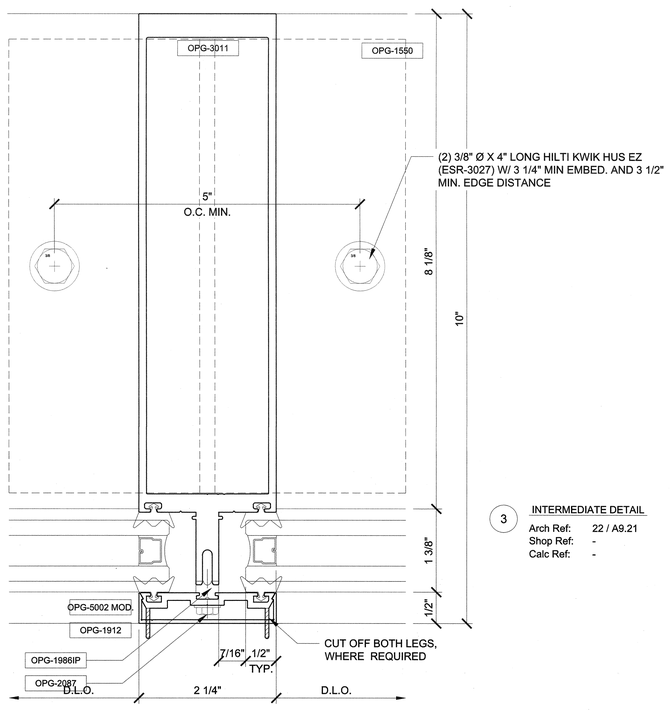

3 INTERMEDIATE DETAIL

Arch Ref: 22 / A9.21
Shop Ref: -
Calc Ref: -

HPI architecture
www.hpiarchitecture.com
115 22nd street
Newport Beach, CA 92663
o: 949. 675. 6442

CONSULTANTS

arcadia

REGISTERED PROFESSIONAL ENGINEER
MAN YOSEF ARIEL
NO. 15733
EXP. 12-31-19
STRUCTURAL
STATE OF CALIFORNIA
AUG 3 0 2018

SEALS / APPROVALS

LICENSED ARCHITECT
RICHARD MORRISON
No. 18500
STATE OF CALIFORNIA

IDENTIFICATION STAMP
DIV. OF THE STATE ARCHITECT
FILE: 30-C2
A# 0 4 - 1 1 6 8 1 0
AC — FLS — SS TY
DATE AUG 3 1 2018

PROJECT TITLE

JOHNSON STUDENT CENTER
INCREMENT 2
1530 W 17TH ST SANTA ANA CA 92706

RANCHO SANTIAGO
Community College District

SUBMITTALS

#	DATE	DESCRIPTION
	08/13/2018	DSA FINAL SUBMITTAL

PROJECT IDENTIFICATION Project Number

THESE DRAWINGS ORIGINALLY CREATED IN AUTODESK REVIT V. 2016 U.O.N.

THE ORIGINAL SIZE OF THIS SHEET IS 30" X 42".

DRAWN BY RM

CHECKED BY -

THESE DRAWINGS AND SPECIFICATIONS ARE THE PROPERTY AND COPYRIGHT OF THE ARCHITECT AND SHALL NOT BE USED ON ANY OTHER PROJECT OR LOCATIONS EXCEPT AS DESCRIBED ON THE DRAWINGS, WITHOUT WRITTEN AGREEMENT WITH THE ARCHITECT.

© HILL PARTNERSHIP INC. 2017

SHEET TITLE

OPG3000
CURTAIN WALL
VERTICAL DETAILS

SHEET NUMBER

CW6.02

DSA FINAL SUBMITTAL

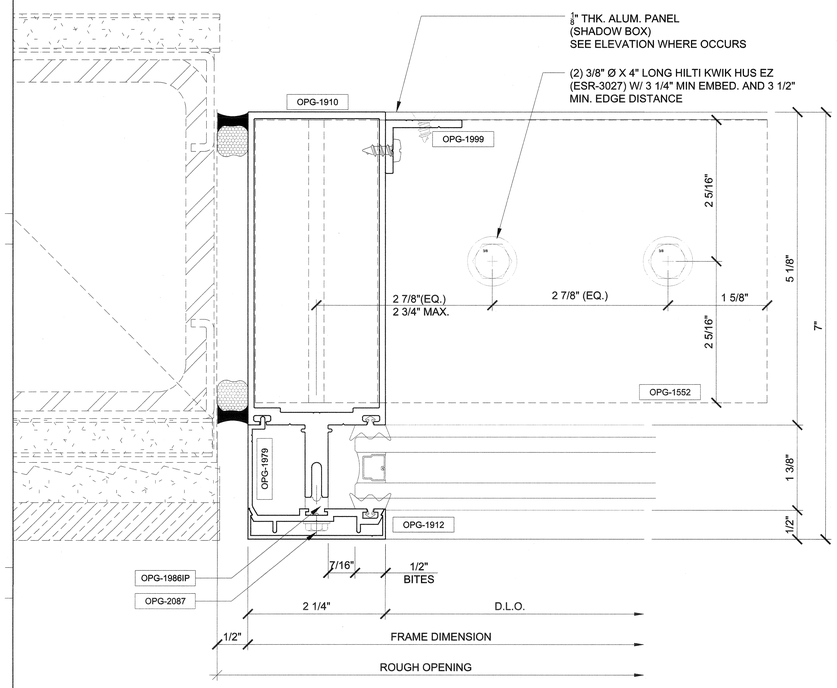

1 JAMB DETAIL
Arch Ref: 16 / A9.21
Shop Ref: -
Calc Ref: -

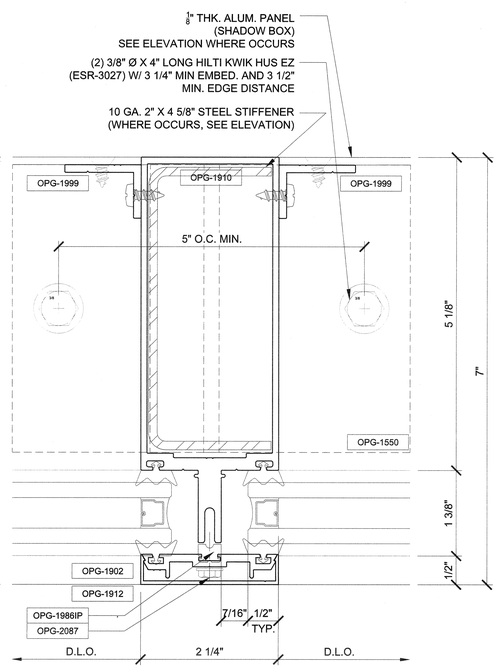

2 INTERMEDIATE DETAIL
Arch Ref: 22 / A9.21
Shop Ref: -
Calc Ref: -

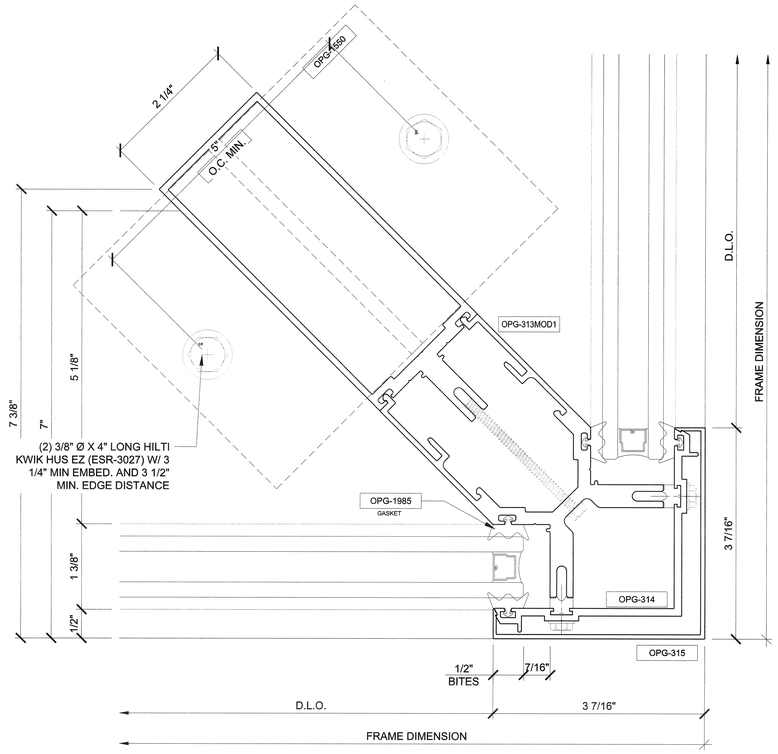

3 CORNER DETAIL
Arch Ref: 22 / A9.21
Shop Ref: -
Calc Ref: -

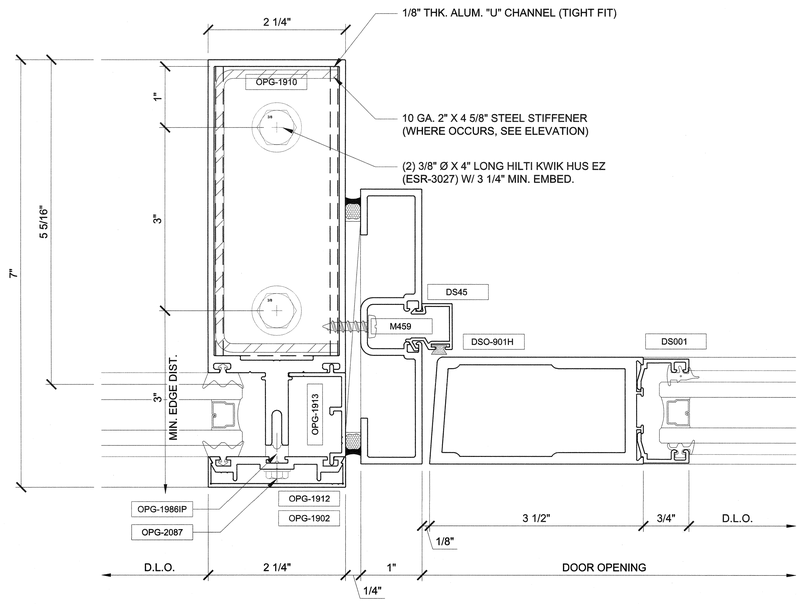

4 INTERMEDIATE DETAIL @ DOOR
Arch Ref: 22 / A9.21
Shop Ref: -
Calc Ref: -

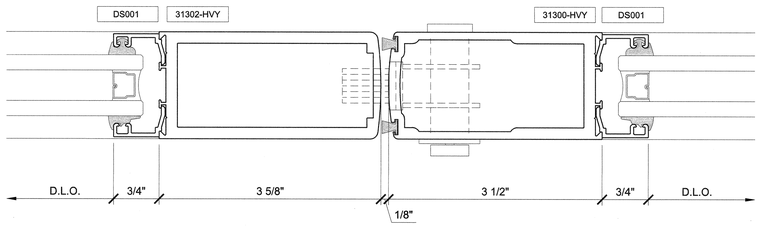

5 DETAIL @ MEETING STILES
Arch Ref: 22 / A9.21
Shop Ref: -
Calc Ref: -

HPI architecture
www.hpiarchitecture.com
115 22nd street
Newport Beach, CA 92663
o: 949. 675. 6442

CONSULTANTS

arcadia

REGISTERED PROFESSIONAL ENGINEER
RAMI JOSEPH ABI-ZEID
NO. 55733
EXP. 12-31-19
STRUCTURAL
STATE OF CALIFORNIA
AUG 30 2018

SEALS / APPROVALS

REGISTERED PROFESSIONAL ENGINEER
AUG 30 2018
STATE OF CALIFORNIA

IDENTIFICATION STAMP
DIV. OF THE STATE ARCHITECT
FILE: 30-C2
A# 04-116810
AC — FLS — SS TY
DATE AUG 31 2018

PROJECT TITLE

JOHNSON STUDENT CENTER
INCREMENT 2
1530 W 17TH ST SANTA ANA CA 92706

RANCHO SANTIAGO
Community College District

SUBMITTALS

#	DATE	DESCRIPTION
	08/13/2018	DSA FINAL SUBMITTAL

PROJECT IDENTIFICATION Project Number

THESE DRAWINGS ORIGINALLY CREATED IN AUTODESK REVIT V. 2016 U.O.N.

THE ORIGINAL SIZE OF THIS SHEET IS 30" X 42".

DRAWN BY RM

CHECKED BY -

THESE DRAWINGS AND SPECIFICATIONS ARE THE PROPERTY AND COPYRIGHT OF THE ARCHITECT AND SHALL NOT BE USED ON ANY OTHER PROJECT OR LOCATIONS EXCEPT AS DESCRIBED ON THE DRAWINGS, WITHOUT WRITTEN AGREEMENT WITH THE ARCHITECT.

© HILL PARTNERSHIP INC. 2017

SHEET TITLE

OPG1900
CURTAIN WALL
VERTICAL DETAILS

SHEET NUMBER

CW6.03

DSA FINAL SUBMITTAL

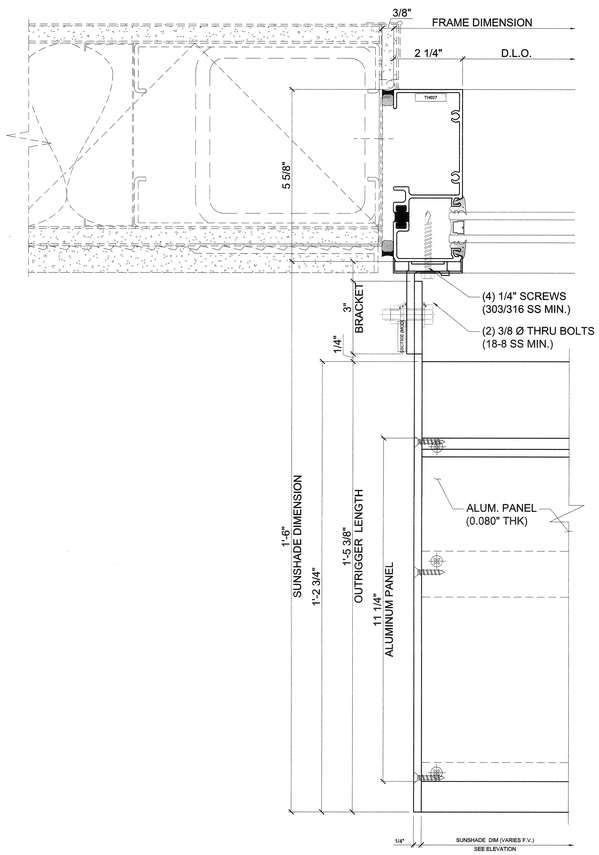

1 TC670 CANOPY @ JAMB

Arch Ref: -
Shop Ref: -
Calc Ref: -

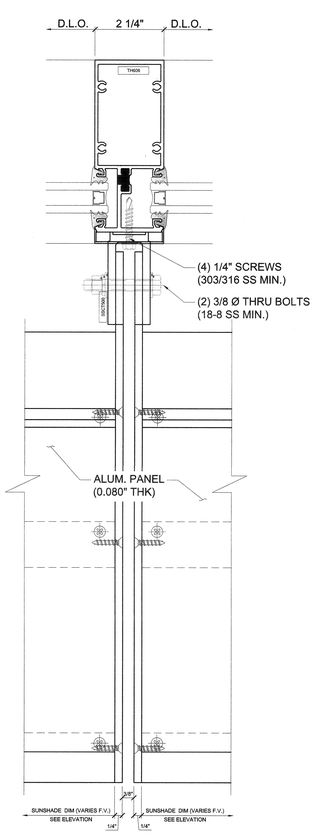

2 TC670 CANOPY @ INTERMEDIATE

Arch Ref: -
Shop Ref: -
Calc Ref: -

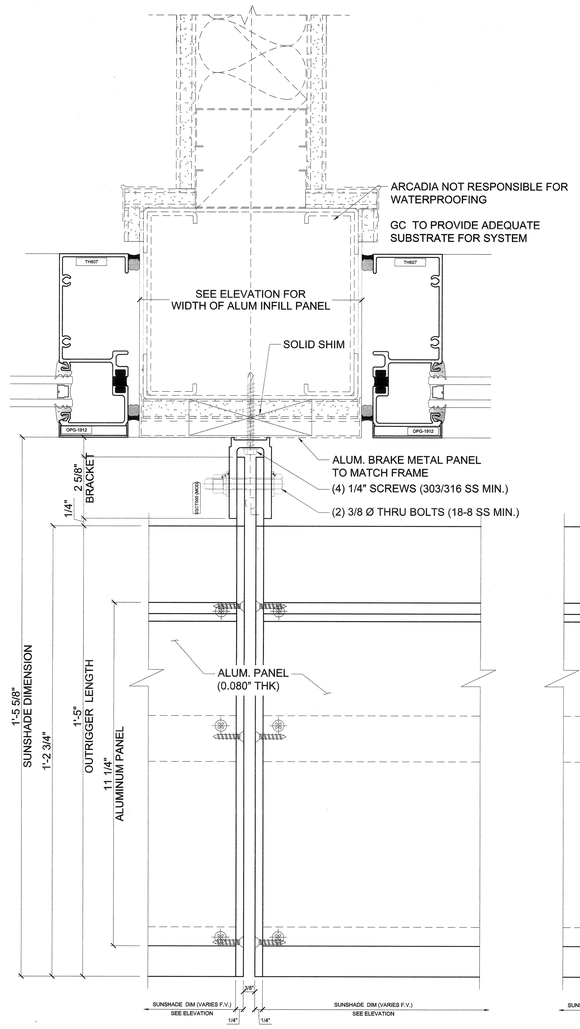

3 TC670 CANOPY @ WALL

Arch Ref: -
Shop Ref: -
Calc Ref: -

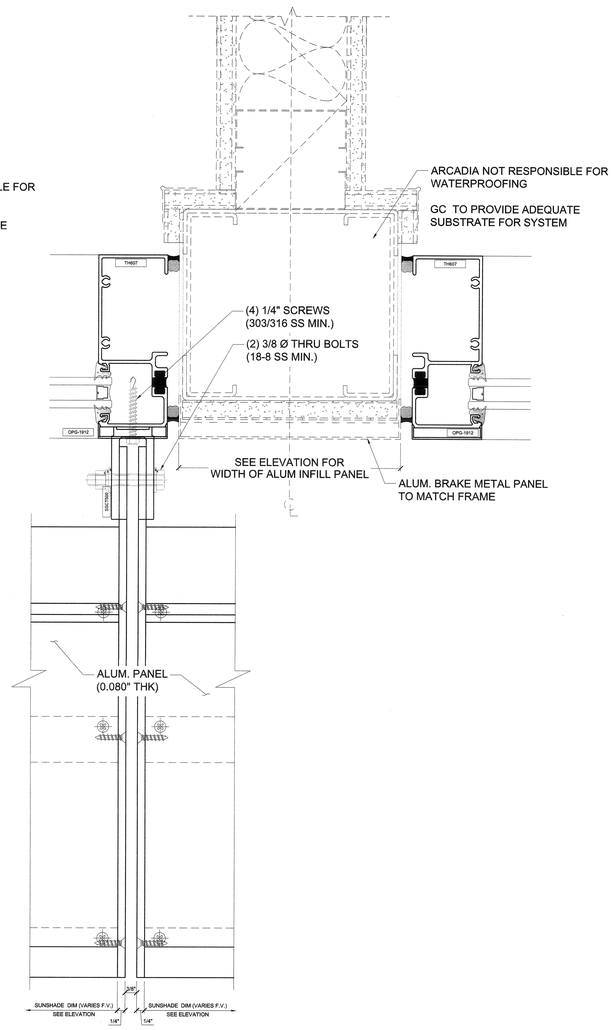

4 TC670 CANOPY @ PARTITION BREAK METAL

Arch Ref: 7 / A9.22
Shop Ref: -
Calc Ref: -

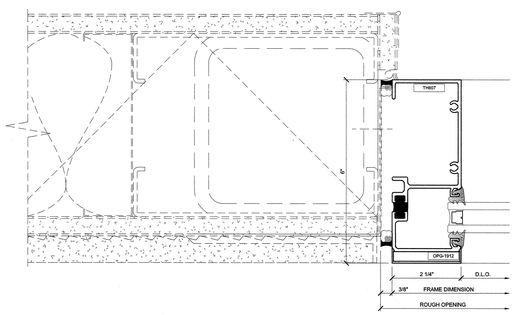

5 TC670 JAMB DETAIL

Arch Ref: 2 / A9.22
Shop Ref: -
Calc Ref: -

HPI architecture
www.hpiarchitecture.com
115 22nd street
Newport Beach, CA 92663
o: 949. 675. 6442

CONSULTANTS

arcadia

REGISTERED PROFESSIONAL ENGINEER
SEAN TOSEF GEDEI
NO. 53733
EXP. 12-31-19
STRUCTURAL
STATE OF CALIFORNIA
AUG 30 2018

SEALS / APPROVALS

LICENSED ARCHITECT
NO. 11800
STATE OF CALIFORNIA

IDENTIFICATION STAMP
DIV. OF THE STATE ARCHITECT
FILE: 30-C2
A# 04-116810
AC — FLS — SS TY
DATE AUG 31 2018

PROJECT TITLE

JOHNSON STUDENT CENTER
INCREMENT 2
1530 W 17TH ST SANTA ANA CA 92706

RANCHO SANTIAGO
Community College District

SUBMITTALS

#	DATE	DESCRIPTION
	08/13/2018	DSA FINAL SUBMITTAL

PROJECT IDENTIFICATION Project Number

THESE DRAWINGS ORIGINALLY CREATED IN AUTODESK REVIT V. 2016 U.O.N.

THE ORIGINAL SIZE OF THIS SHEET IS 30" X 42".

DRAWN BY RM

CHECKED BY -

THESE DRAWINGS AND SPECIFICATIONS ARE THE PROPERTY AND COPYRIGHT OF THE ARCHITECT AND SHALL NOT BE USED ON ANY OTHER PROJECT OR LOCATIONS EXCEPT AS DESCRIBED ON THE DRAWINGS, WITHOUT WRITTEN AGREEMENT WITH THE ARCHITECT.

© HILL PARTNERSHIP INC. 2017

SHEET TITLE

TC670
STOREFRONT
VERTICAL DETAILS

SHEET NUMBER

CW6.04

DSA FINAL SUBMITTAL

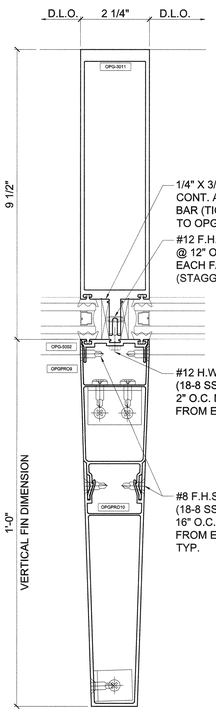

1 OPG3000 INTERMEDIATE DETAIL @ FIN

Arch Ref: 17 / A9.21
Shop Ref: -
Calc Ref: -

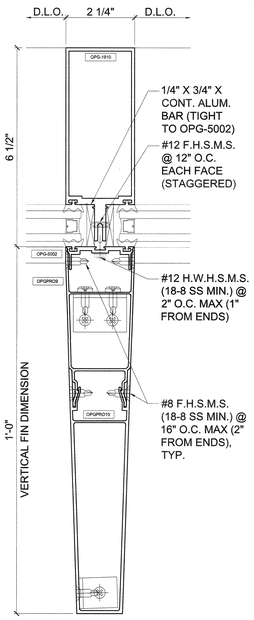

2 OPG6000 INTERMEDIATE DETAIL @ FIN

Arch Ref: 17 / A9.21
Shop Ref: -
Calc Ref: -

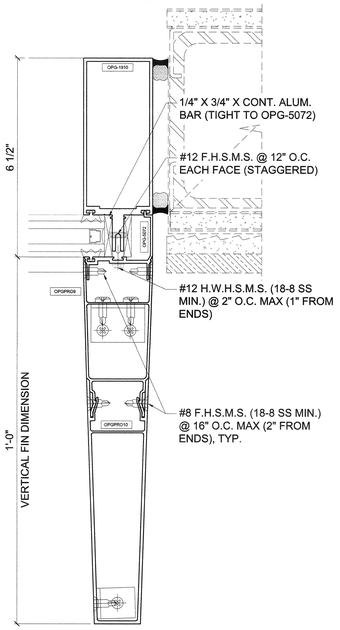

3 OPG6000 JEMB DETAIL @ FIN

Arch Ref: -
Shop Ref: -
Calc Ref: -

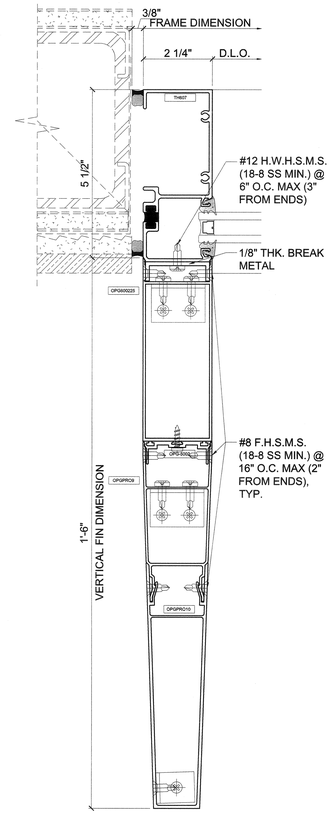

4 TC670 JAMB DETAIL @ FIN

Arch Ref: 17 / A9.21
Shop Ref: -
Calc Ref: -

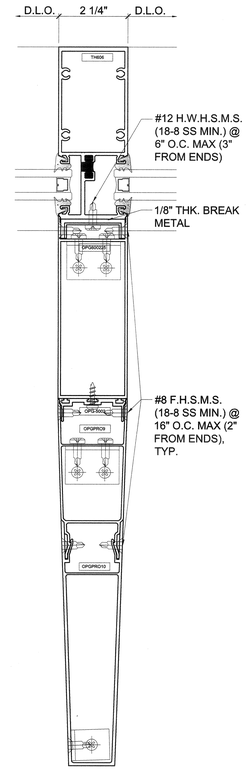

5 TC670 INTERMEDIATE DETAIL @ FIN

Arch Ref: 17 / A9.21
Shop Ref: -
Calc Ref: -

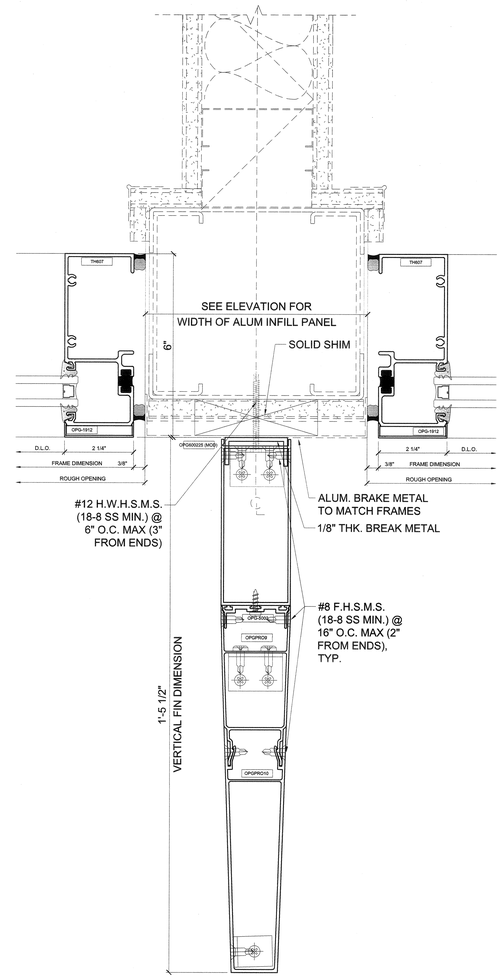

6 TC670 FIN @ WALL

Arch Ref: 7 / A9.22
Shop Ref: -
Calc Ref: -

HPI architecture
www.hpiarchitecture.com
115 22nd street
Newport Beach, CA 92663
o: 949. 675. 6442

CONSULTANTS

arcadia

STRUCTURAL ENGINEER — NO. 53783 — EXP. 12-31-18 — STATE OF CALIFORNIA
AUG 30 2018

SEALS / APPROVALS

LICENSED ARCHITECT — NO. 11800 — STATE OF CALIFORNIA

IDENTIFICATION STAMP
DIV. OF THE STATE ARCHITECT
FILE: 30-C2
A# 04-116810
AC — FLS — SS TY
DATE AUG 31 2018

PROJECT TITLE

JOHNSON STUDENT CENTER
INCREMENT 2
1530 W 17TH ST SANTA ANA CA 92706

RANCHO SANTIAGO Community College District

SUBMITTALS

#	DATE	DESCRIPTION
	08/13/2018	DSA FINAL SUBMITTAL

PROJECT IDENTIFICATION Project Number

THESE DRAWINGS ORIGINALLY CREATED IN AUTODESK REVIT v. 2016 U.O.N.

THE ORIGINAL SIZE OF THIS SHEET IS 30" X 42".

DRAWN BY RM

CHECKED BY -

THESE DRAWINGS AND SPECIFICATIONS ARE THE PROPERTY AND COPYRIGHT OF THE ARCHITECT AND SHALL NOT BE USED ON ANY OTHER PROJECT OR LOCATIONS EXCEPT AS DESCRIBED ON THE DRAWINGS, WITHOUT WRITTEN AGREEMENT WITH THE ARCHITECT.

© HILL PARTNERSHIP INC. 2017

SHEET TITLE

OPG3000, OPG1900, TC670
VERTICAL DETAILS

SHEET NUMBER

CW6.05

DSA FINAL SUBMITTAL

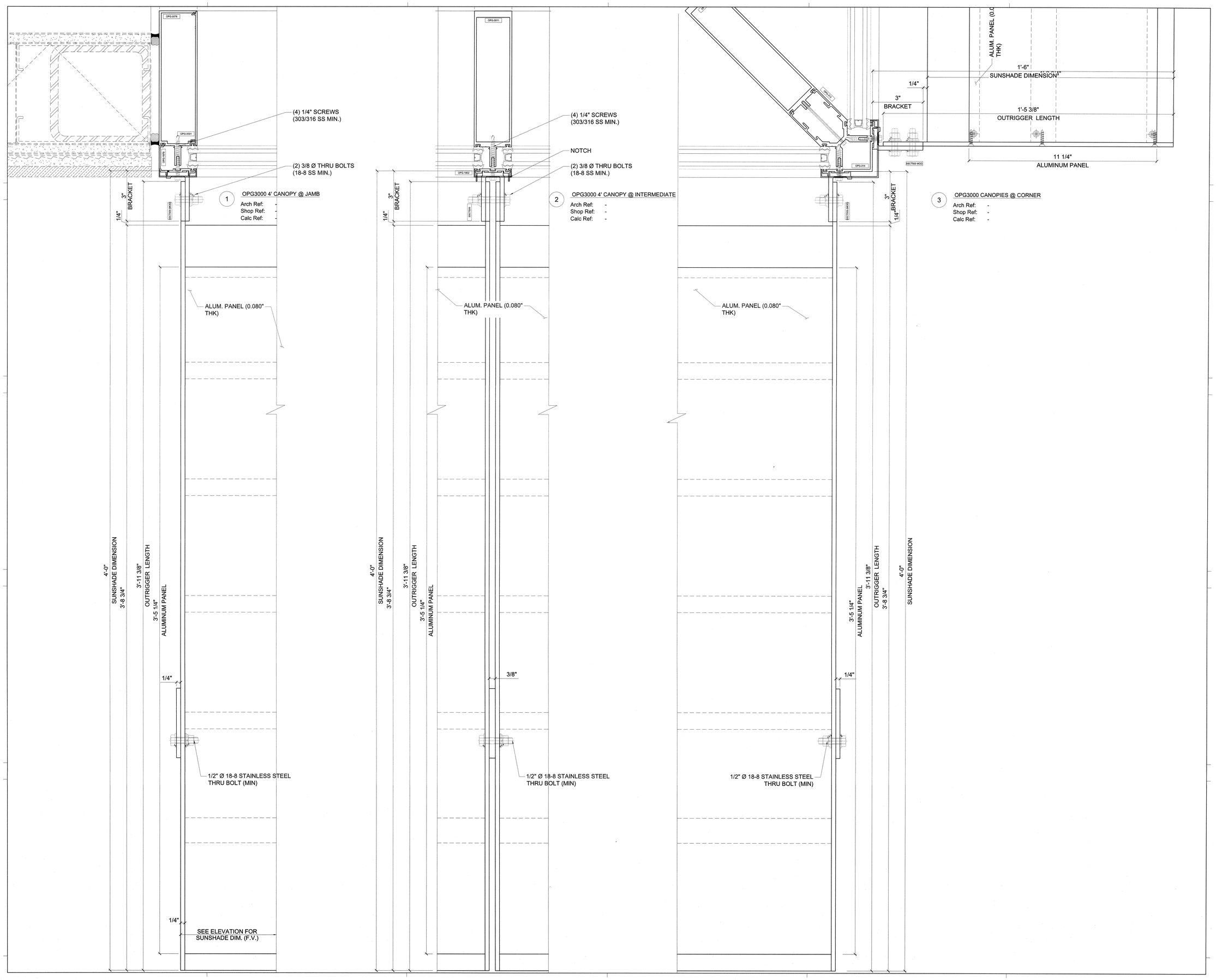

HPI architecture
www.hpiarchitecture.com
115 22nd street
Newport Beach, CA 92663
o: 949. 675. 6442

CONSULTANTS

arcadia

SEALS / APPROVALS

IDENTIFICATION STAMP
DIV. OF THE STATE ARCHITECT
FILE: 30-C2
A# 04-116810
AC — FLS — SS TY
DATE AUG 31 2018

PROJECT TITLE

JOHNSON STUDENT CENTER
INCREMENT 2
1530 W 17TH ST SANTA ANA CA 92706

RANCHO SANTIAGO
Community College District

SUBMITTALS

#	DATE	DESCRIPTION
	08/13/2018	DSA FINAL SUBMITTAL

PROJECT IDENTIFICATION Project Number

THESE DRAWINGS ORIGINALLY CREATED IN AUTODESK REVIT V. 2016 U.O.N.

THE ORIGINAL SIZE OF THIS SHEET IS 30" X 42".

DRAWN BY R.M.

CHECKED BY -

THESE DRAWINGS AND SPECIFICATIONS ARE THE PROPERTY AND COPYRIGHT OF THE ARCHITECT AND SHALL NOT BE USED ON ANY OTHER PROJECT OR LOCATIONS EXCEPT AS DESCRIBED ON THE DRAWINGS, WITHOUT WRITTEN AGREEMENT WITH THE ARCHITECT.

© HILL PARTNERSHIP INC. 2017

SHEET TITLE

OPG3000
CURTAIN WALL
VERTICAL DETAILS

SHEET NUMBER

CW6.06

DSA FINAL SUBMITTAL

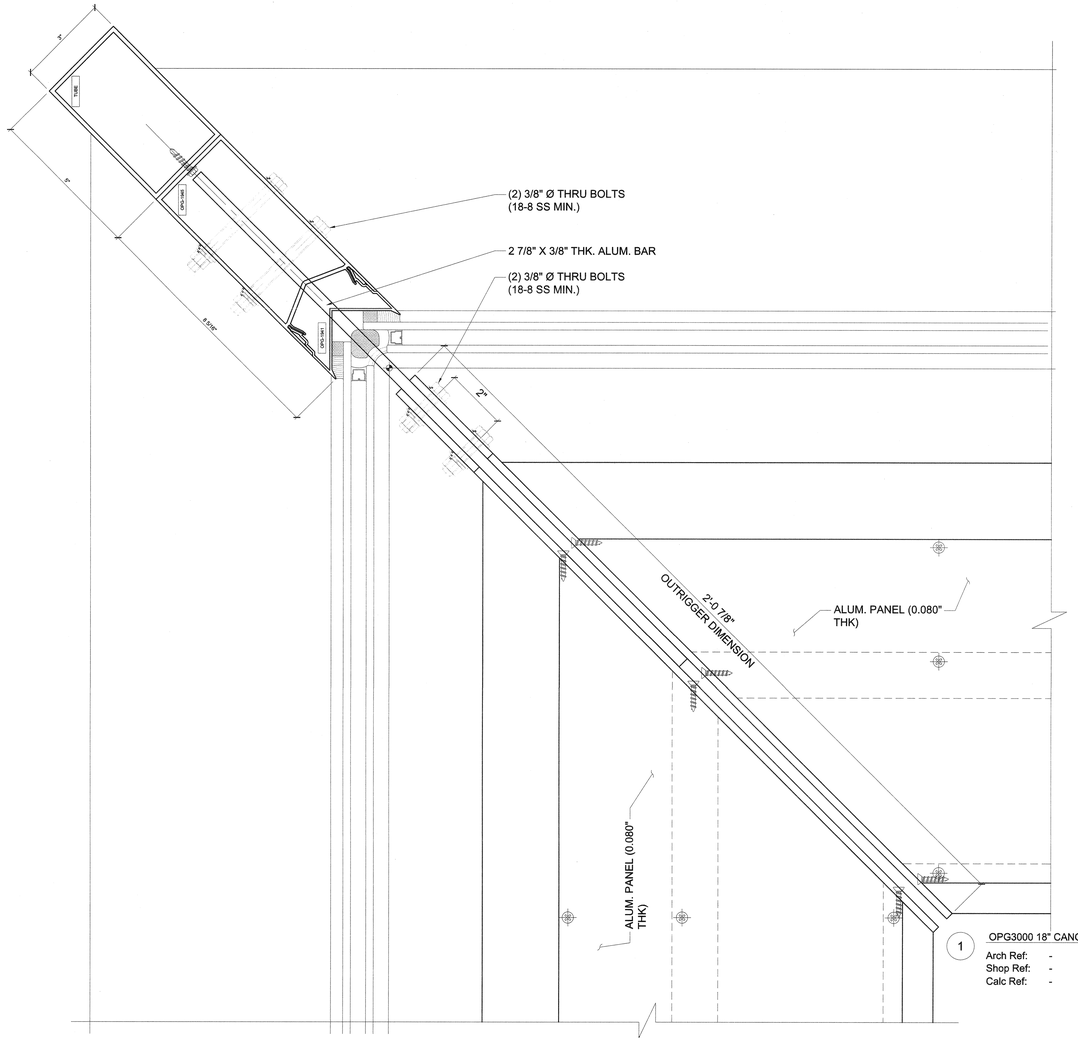

1 OPG3000 18" CANOPY @ CORNER

Arch Ref: -
Shop Ref: -
Calc Ref: -

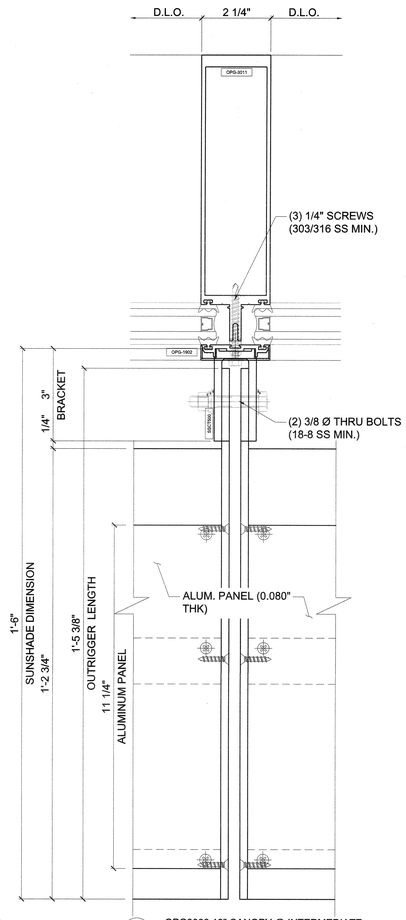

2 OPG3000 18" CANOPY @ INTERMEDIATE

Arch Ref: -
Shop Ref: -
Calc Ref: -

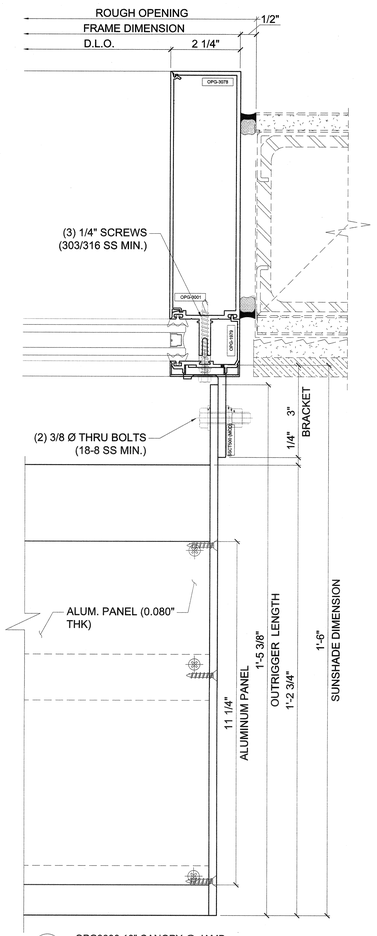

3 OPG3000 18" CANOPY @ JAMB

Arch Ref: -
Shop Ref: -
Calc Ref: -

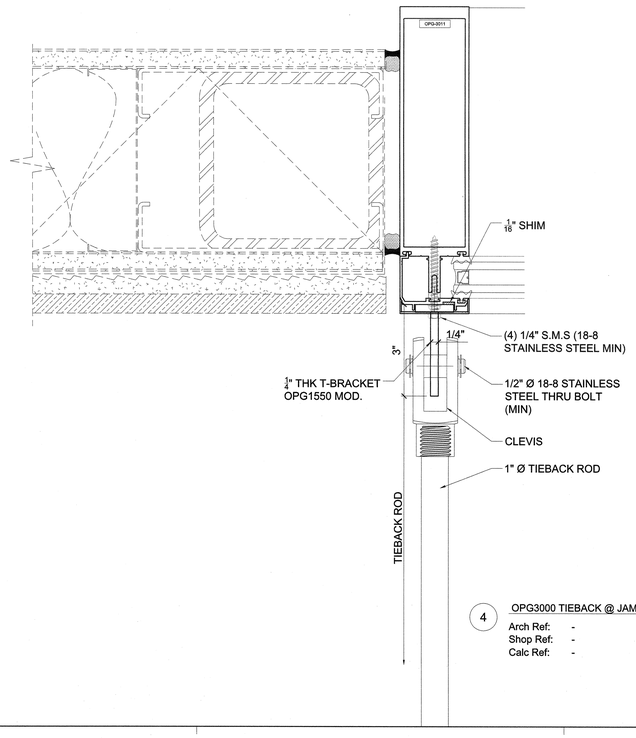

4 OPG3000 TIEBACK @ JAMB

Arch Ref: -
Shop Ref: -
Calc Ref: -

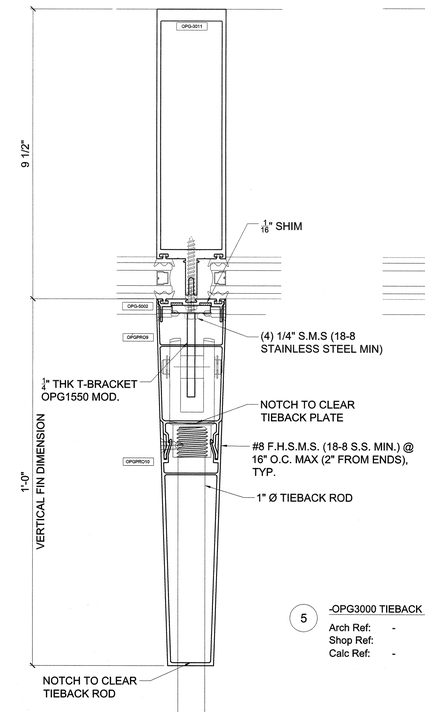

5 -OPG3000 TIEBACK @ INTERMEDIATE

Arch Ref: -
Shop Ref: -
Calc Ref: -

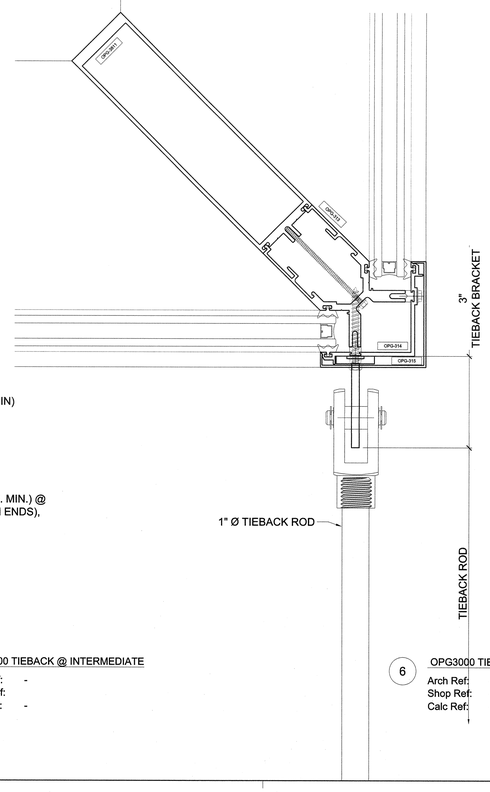

6 OPG3000 TIEBACK @ CORNER

Arch Ref: -
Shop Ref: -
Calc Ref: -

HPI architecture
www.hpiarchitecture.com
115 22nd street
Newport Beach, CA 92663
o: 949. 675. 6442

CONSULTANTS

arcadia

SEALS / APPROVALS

IDENTIFICATION STAMP
DIV. OF THE STATE ARCHITECT
FILE: 30-C2
A# 04-116810
AC — FLS — SS
DATE AUG 31 2018

PROJECT TITLE

JOHNSON STUDENT CENTER
INCREMENT 2
1530 W 17TH ST SANTA ANA CA 92706

RANCHO SANTIAGO
Community College District

SUBMITTALS

#	DATE	DESCRIPTION
	08/13/2018	DSA FINAL SUBMITTAL

PROJECT IDENTIFICATION Project Number

THESE DRAWINGS ORIGINALLY CREATED IN AUTODESK REVIT V. 2016 U.O.N.

THE ORIGINAL SIZE OF THIS SHEET IS 30" X 42".

DRAWN BY RM

CHECKED BY -

THESE DRAWINGS AND SPECIFICATIONS ARE THE PROPERTY AND COPYRIGHT OF THE ARCHITECT AND SHALL NOT BE USED ON ANY OTHER PROJECT OR LOCATIONS EXCEPT AS DESCRIBED ON THE DRAWINGS, WITHOUT WRITTEN AGREEMENT WITH THE ARCHITECT.

© HILL PARTNERSHIP INC. 2017

SHEET TITLE

OPG3000
CURTAIN WALL
VERTICAL DETAILS

SHEET NUMBER

CW6.07

DSA FINAL SUBMITTAL

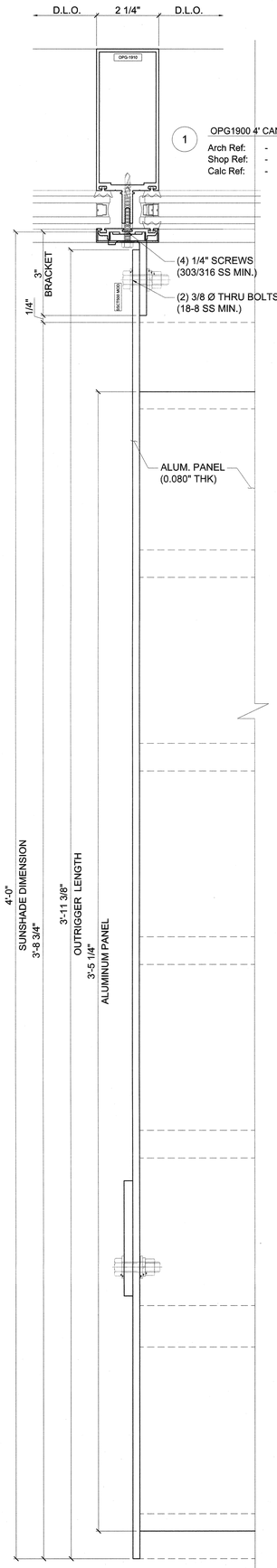

1 OPG1900 4' CANOPY @ INTERMEDIATE

Arch Ref: -
Shop Ref: -
Calc Ref: -

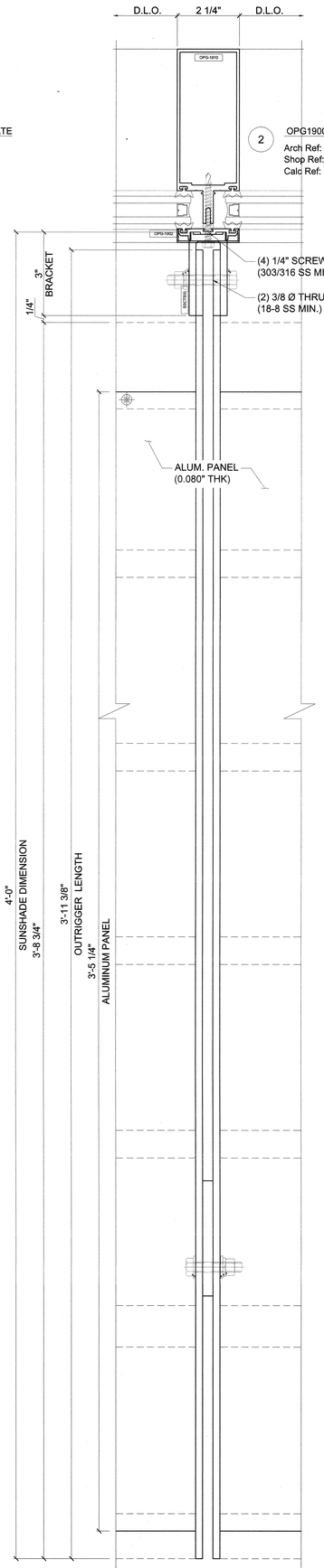

2 OPG1900 4' CANOPY @ INTERMEDIATE

Arch Ref: -
Shop Ref: -
Calc Ref: -

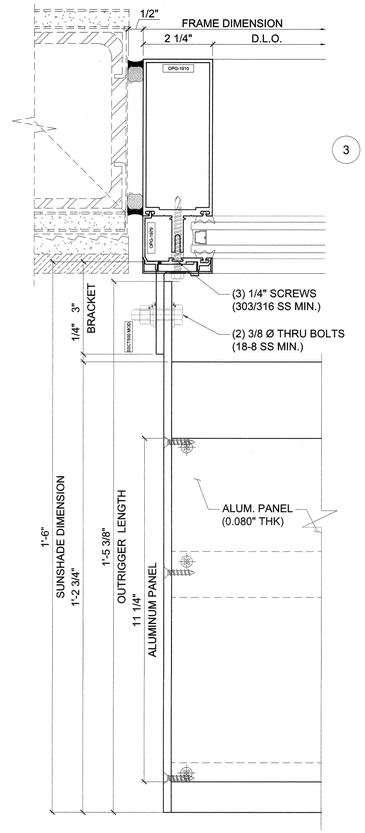

3 OPG1900 18" CANOPY @ JAMB

Arch Ref: -
Shop Ref: -
Calc Ref: -

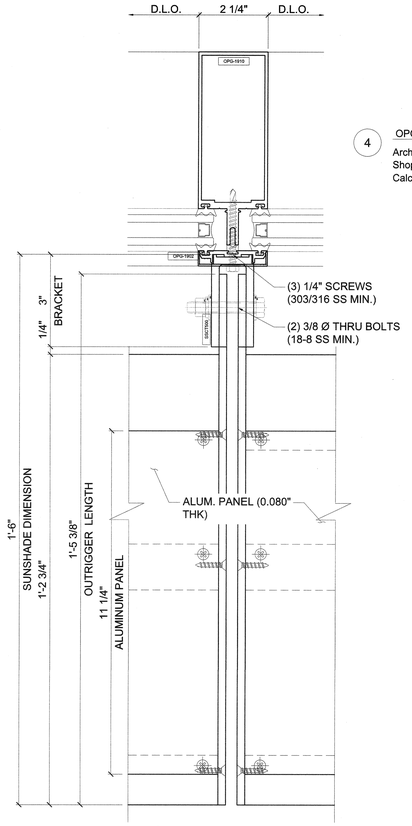

4 OPG1900 18" CANOPY @ INTERMEDIATE

Arch Ref: -
Shop Ref: -
Calc Ref: -

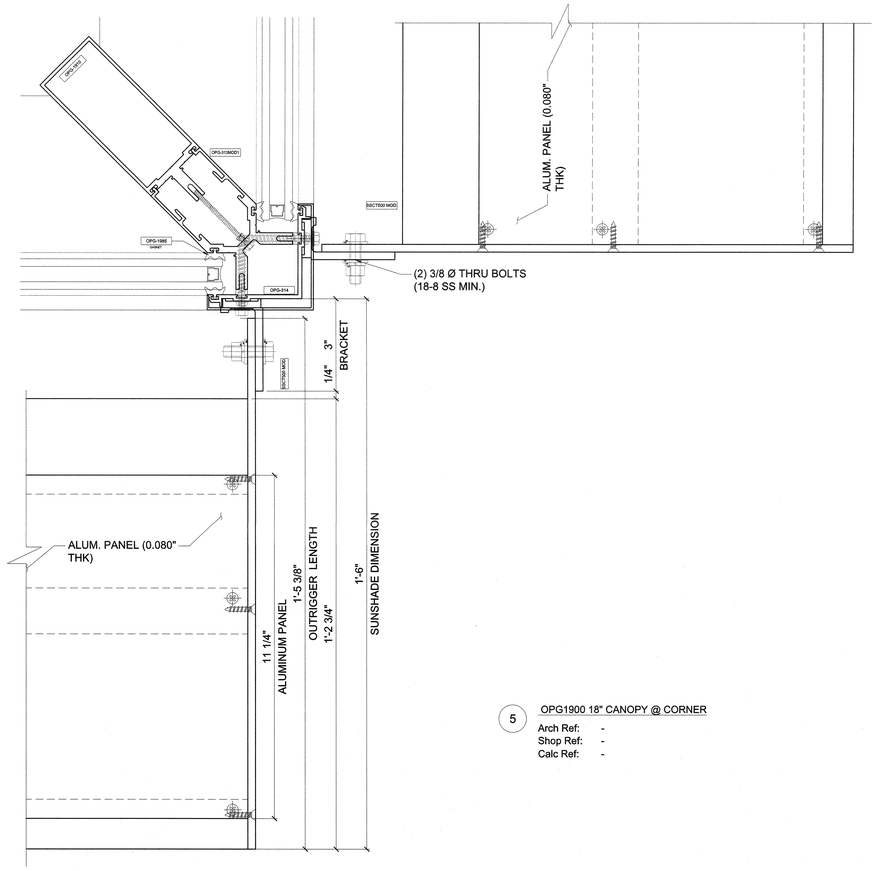

5 OPG1900 18" CANOPY @ CORNER

Arch Ref: -
Shop Ref: -
Calc Ref: -

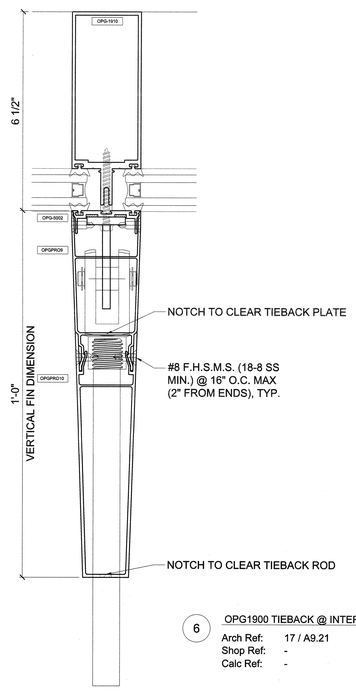

6 OPG1900 TIEBACK @ INTERMEDIATE

Arch Ref: 17 / A9.21
Shop Ref: -
Calc Ref: -

HPI architecture
www.hpiarchitecture.com
115 22nd street
Newport Beach, CA 92663
o: 949. 675. 6442

CONSULTANTS

arcadia

REGISTERED PROFESSIONAL ENGINEER
ALAN JOSEPH SCHWARTZ
NO. 15733
EXP. 12-31-20
STRUCTURAL
STATE OF CALIFORNIA
AUG 30 2018

SEALS / APPROVALS

LICENSED LANDSCAPE ARCHITECT
NO. 2192
STATE OF CALIFORNIA

IDENTIFICATION STAMP
DIV. OF THE STATE ARCHITECT
FILE: 30-C2
A# 04-116810
AC — FLS — SS TJ
DATE AUG 31 2018

PROJECT TITLE

JOHNSON STUDENT CENTER
INCREMENT 2
1530 W 17TH ST SANTA ANA CA 92706

RANCHO SANTIAGO
Community College District

SUBMITTALS

#	DATE	DESCRIPTION
	08/13/2018	DSA FINAL SUBMITTAL

PROJECT IDENTIFICATION Project Number

THESE DRAWINGS ORIGINALLY CREATED IN AUTODESK REVIT V. 2016 U.O.N.

THE ORIGINAL SIZE OF THIS SHEET IS 30" X 42".

DRAWN BY RM

CHECKED BY -

THESE DRAWINGS AND SPECIFICATIONS ARE THE PROPERTY AND COPYRIGHT OF THE ARCHITECT AND SHALL NOT BE USED ON ANY OTHER PROJECT OR LOCATIONS EXCEPT AS DESCRIBED ON THE DRAWINGS, WITHOUT WRITTEN AGREEMENT WITH THE ARCHITECT.

© HILL PARTNERSHIP INC. 2017

SHEET TITLE

OPG1900
CURTAIN WALL
VERTICAL DETAILS

SHEET NUMBER

CW6.08

DSA FINAL SUBMITTAL

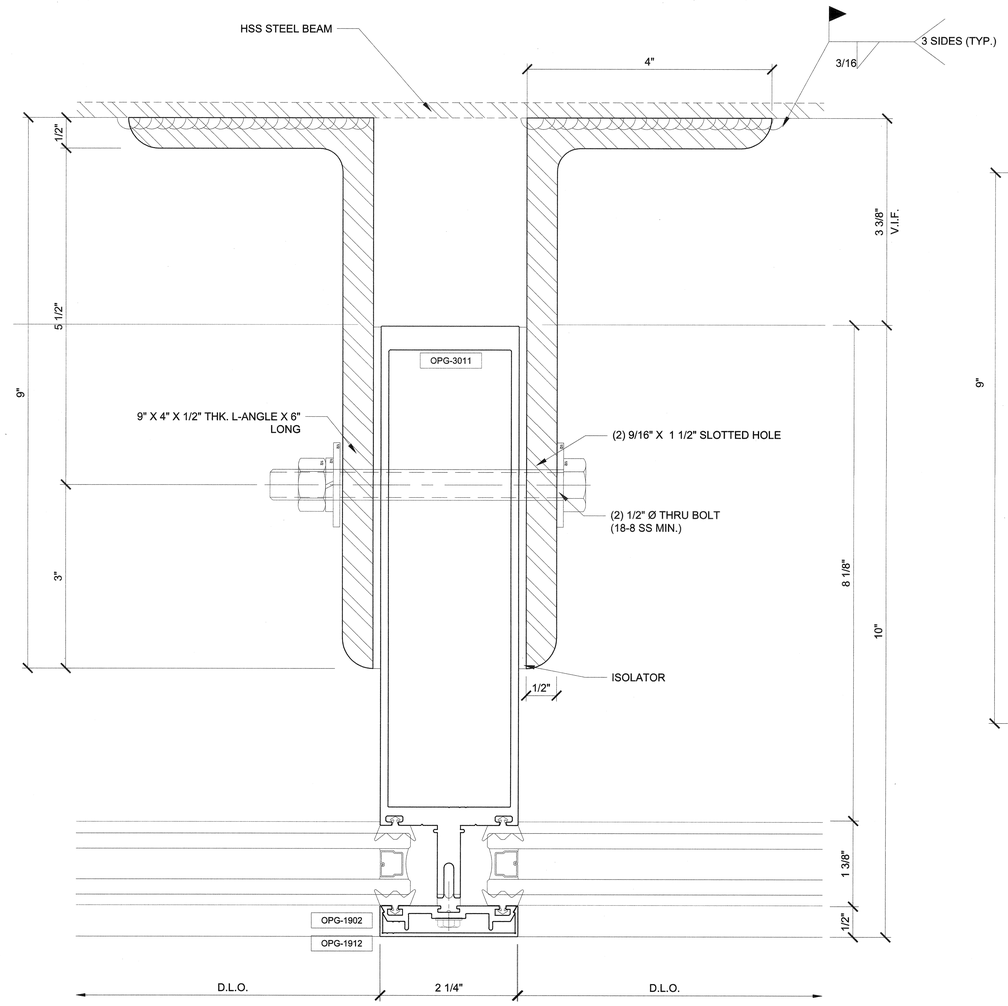

1 WIND GIRT @ C1 & C2

Arch Ref: N/A
Shop Ref: -
Calc Ref: -

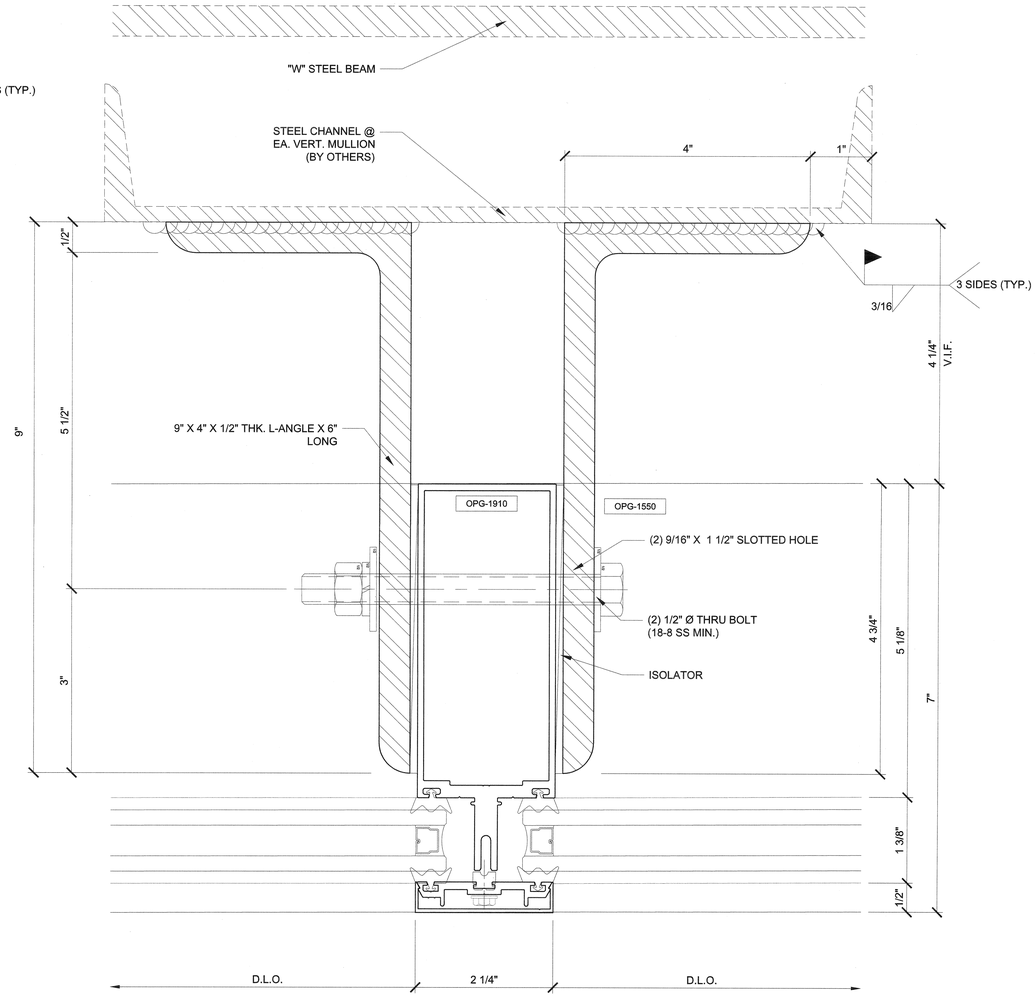

2 WIND GIRT @ C8

Arch Ref: 8 / A9.21
Shop Ref: -
Calc Ref: -

HPI architecture
www.hpiarchitecture.com
115 22nd street
Newport Beach, CA 92663
o: 949. 675. 6442

CONSULTANTS

arcadia

REGISTERED PROFESSIONAL ENGINEER SAN JOSE, CALIFORNIA NO. 53793 EXP. 12-31-19 STRUCTURAL STATE OF CALIFORNIA
AUG 30 2018

SEALS / APPROVALS

LICENSED ARCHITECT STATE OF CALIFORNIA

IDENTIFICATION STAMP
DIV. OF THE STATE ARCHITECT
FILE: 30-C2
A# 04-116810
AC — FLS — SS TY
DATE AUG 31 2018

PROJECT TITLE

JOHNSON STUDENT CENTER
INCREMENT 2
1530 W 17TH ST SANTA ANA CA 92706

RANCHO SANTIAGO Community College District

SUBMITTALS

#	DATE	DESCRIPTION
	08/13/2018	DSA FINAL SUBMITTAL

PROJECT IDENTIFICATION Project Number

THESE DRAWINGS ORIGINALLY CREATED IN AUTODESK REVIT V. 2016 U.O.N.

THE ORIGINAL SIZE OF THIS SHEET IS 30" X 42".

DRAWN BY RM

CHECKED BY -

THESE DRAWINGS AND SPECIFICATIONS ARE THE PROPERTY AND COPYRIGHT OF THE ARCHITECT AND SHALL NOT BE USED ON ANY OTHER PROJECT OR LOCATIONS EXCEPT AS DESCRIBED ON THE DRAWINGS, WITHOUT WRITTEN AGREEMENT WITH THE ARCHITECT.

© HILL PARTNERSHIP INC. 2017

SHEET TITLE

OPG3000 & OPG1900 CURTAIN WALL VERTICAL DETAILS

SHEET NUMBER

CW6.09

DSA FINAL SUBMITTAL

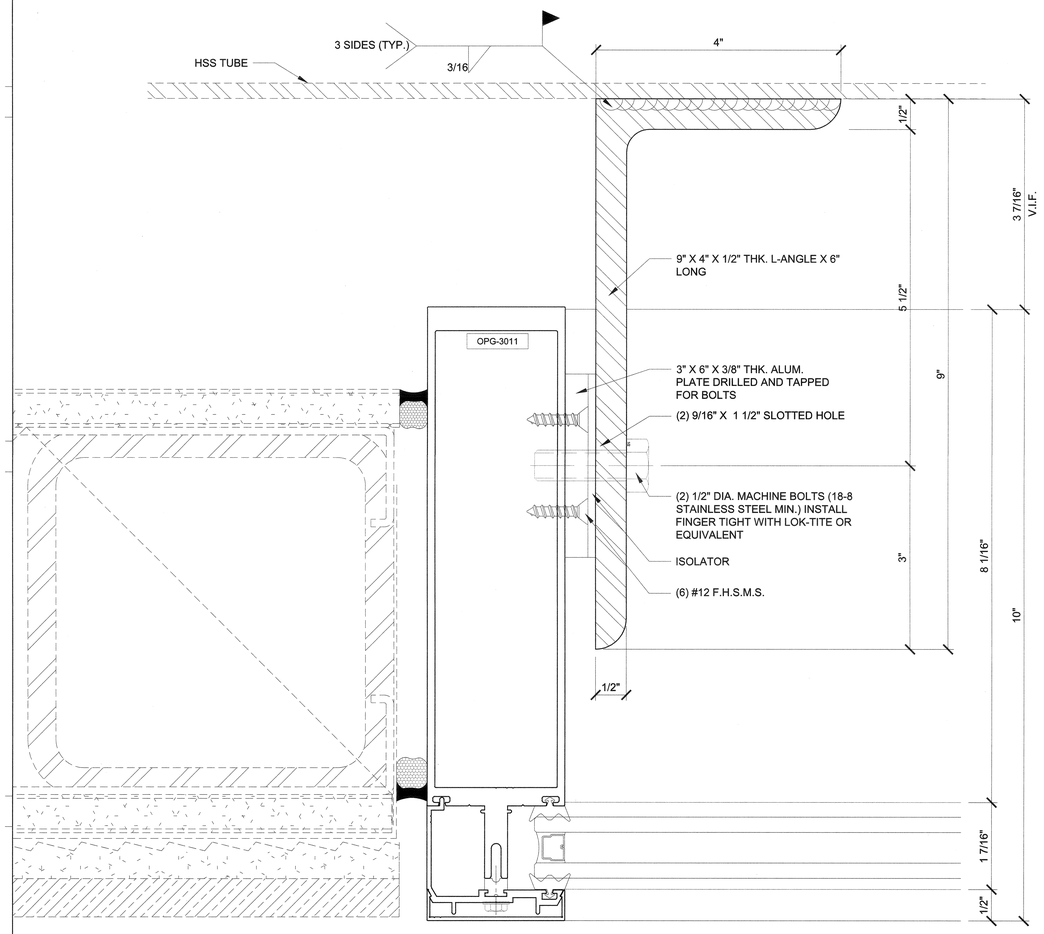

1 WIND GIRT @ C1, C3 & C4 @ JAMB

Arch Ref: N/A
Shop Ref: 3 / CW5.09
Calc Ref: -

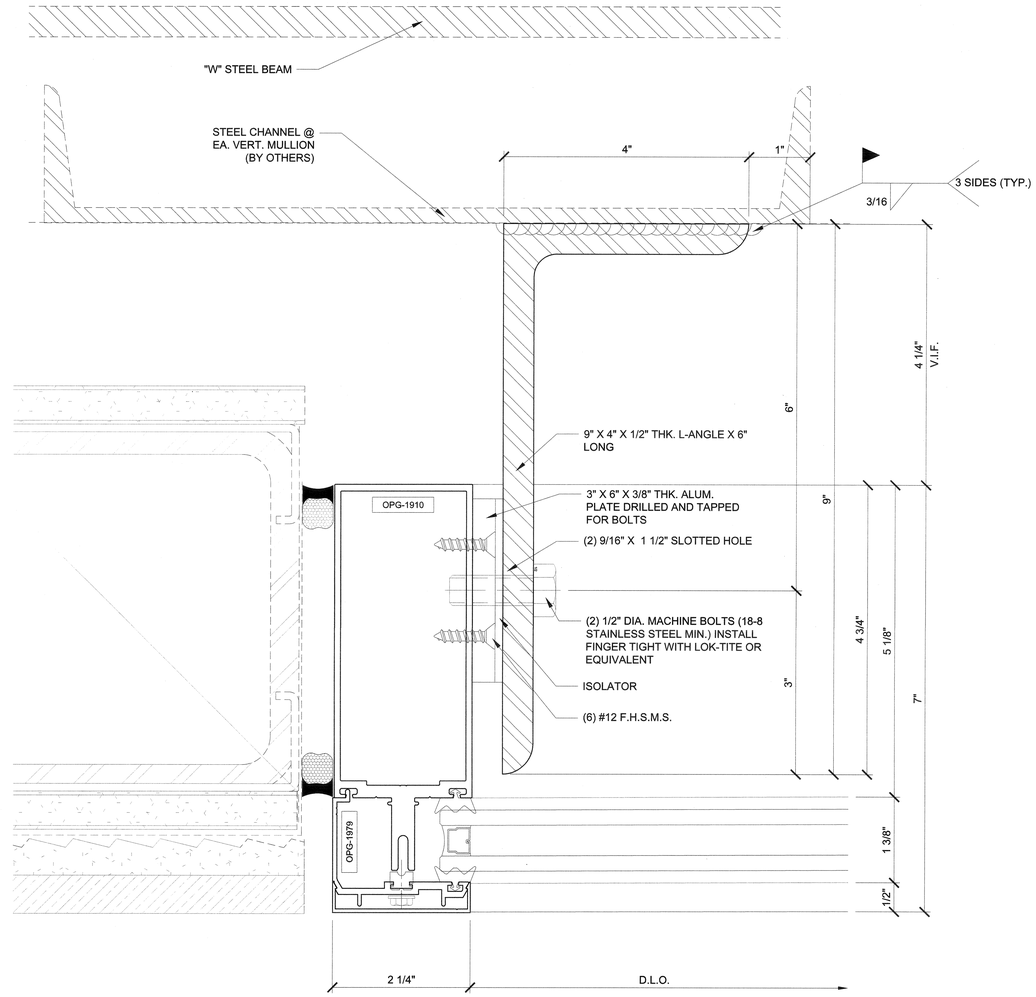

2 WIND GIRT @ C8 @ JAMB

Arch Ref: 8 / A9.21
Shop Ref: 2 / CW5.09
Calc Ref: -

HPI architecture
www.hpiarchitecture.com
115 22nd street
Newport Beach, CA 92663
o: 949. 675. 6442

CONSULTANTS

arcadia

REGISTERED STRUCTURAL ENGINEER NO. 55733 EXP. 12-31-19 STATE OF CALIFORNIA
AUG 30 2018

SEALS / APPROVALS

IDENTIFICATION STAMP
DIV. OF THE STATE ARCHITECT
FILE: 30-C2
A# 04-116810
AC — FLS — SS TY
DATE AUG 31 2018

PROJECT TITLE

JOHNSON STUDENT CENTER
INCREMENT 2
1530 W 17TH ST SANTA ANA CA 92706

RANCHO SANTIAGO Community College District

SUBMITTALS

#	DATE	DESCRIPTION
	08/13/2018	DSA FINAL SUBMITTAL

PROJECT IDENTIFICATION Project Number

THESE DRAWINGS ORIGINALLY CREATED IN AUTODESK REVIT V. 2016 U.O.N.

THE ORIGINAL SIZE OF THIS SHEET IS 30" X 42".

DRAWN BY RM

CHECKED BY -

THESE DRAWINGS AND SPECIFICATIONS ARE THE PROPERTY AND COPYRIGHT OF THE ARCHITECT AND SHALL NOT BE USED ON ANY OTHER PROJECT OR LOCATIONS EXCEPT AS DESCRIBED ON THE DRAWINGS, WITHOUT WRITTEN AGREEMENT WITH THE ARCHITECT.

© HILL PARTNERSHIP INC. 2017

SHEET TITLE

OPG3000 & OPG1900 CURTAIN WALL VERTICAL DETAILS

SHEET NUMBER

CW6.10

DSA FINAL SUBMITTAL

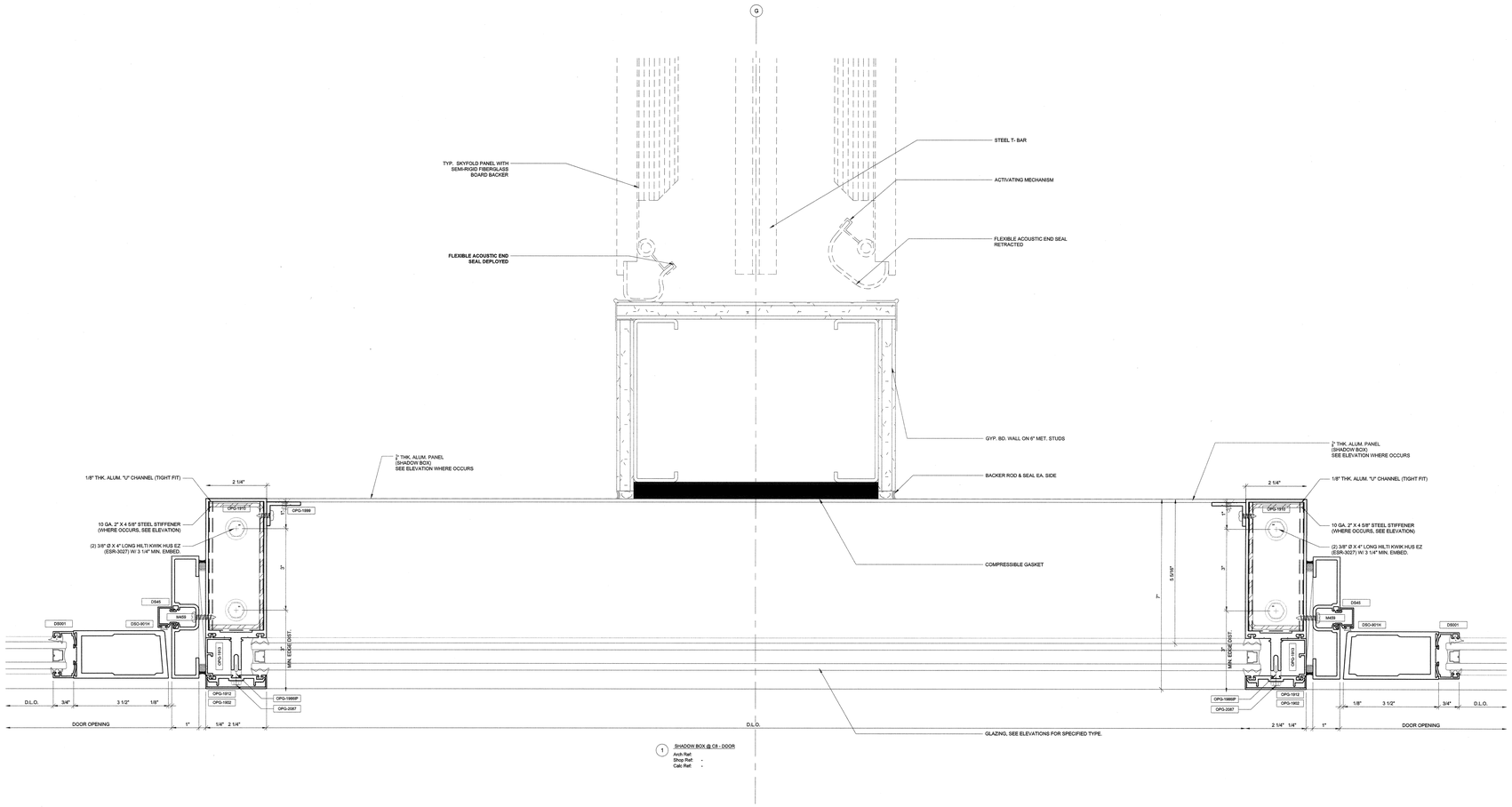

HPI architecture
www.hpiarchitecture.com
115 22nd street
Newport Beach, CA 92663
o: 949. 675. 6442

CONSULTANTS

arcadia

SEALS / APPROVALS

IDENTIFICATION STAMP
DIV. OF THE STATE ARCHITECT
FILE: 30-C2
A# 04-116810
AC — FLS — SS TY
DATE AUG 31 2018

PROJECT TITLE

JOHNSON STUDENT CENTER
INCREMENT 2
1530 W 17TH ST SANTA ANA CA 92706

RANCHO SANTIAGO
Community College District

SUBMITTALS

#	DATE	DESCRIPTION
	08/13/2018	DSA FINAL SUBMITTAL

PROJECT IDENTIFICATION Project Number

THESE DRAWINGS ORIGINALLY CREATED IN AUTODESK REVIT V. 2016 U.O.N.

THE ORIGINAL SIZE OF THIS SHEET IS 30" X 42".

DRAWN BY RM

CHECKED BY -

THESE DRAWINGS AND SPECIFICATIONS ARE THE PROPERTY AND COPYRIGHT OF THE ARCHITECT AND SHALL NOT BE USED ON ANY OTHER PROJECT OR LOCATIONS EXCEPT AS DESCRIBED ON THE DRAWINGS, WITHOUT WRITTEN AGREEMENT WITH THE ARCHITECT.

© HILL PARTNERSHIP INC. 2017

SHEET TITLE

OPG3000
CURTAIN WALL
VERTICAL DETAILS

SHEET NUMBER

CW6.11

DSA FINAL SUBMITTAL

OPG-1912

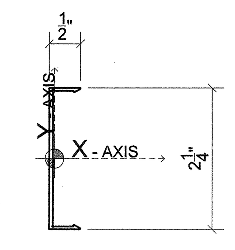

Area: 0.1735
Perimeter: 6.4400
Bounding box: X: -0.0858 -- 0.4142
Y: -1.1233 -- 1.1267
Centroid: X: 0.0000
Y: 0.0000
Moments of inertia: X: 0.1039
Y: 0.0025
Product of inertia: XY: 0.0000
Radii of gyration: X: 0.7737
Y: 0.1196
Principal moments and X-Y directions about centroid:
I: 0.0025 along [0.0001 1.0000]
J: 0.1039 along [-1.0000 0.0001]

OPG-1902

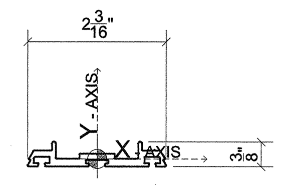

Area: 0.3363
Perimeter: 7.2055
Bounding box: X: -1.0999 -- 1.0981
Y: -0.1209 -- 0.2741
Centroid: X: 0.0000
Y: 0.0000
Moments of inertia: X: 0.0023
Y: 0.1390
Product of inertia: XY: 0.0000
Radii of gyration: X: 0.0829
Y: 0.6430
Principal moments and X-Y directions about centroid:
I: 0.0023 along [1.0000 0.0003]
J: 0.1390 along [-0.0003 1.0000]

OPG-1979

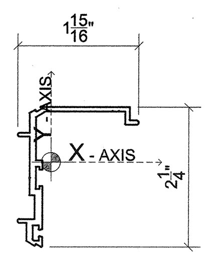

Area: 0.4261
Perimeter: 10.1895
Bounding box: X: -0.5300 -- 1.3780
Y: -1.3489 -- 0.8752
Centroid: X: 0.0000
Y: 0.0000
Moments of inertia: X: 0.2321
Y: 0.1049
Product of inertia: XY: 0.0883
Radii of gyration: X: 0.7381
Y: 0.4963
Principal moments and X-Y directions about centroid:
I: 0.0597 along [0.4559 0.8900]
J: 0.2773 along [-0.8900 0.4559]

OPG-1999

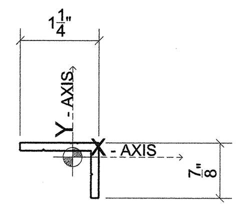

Area: 0.2486
Perimeter: 4.2738
Bounding box: X: -0.8363 -- 0.4137
Y: -0.6486 -- 0.2264
Centroid: X: 0.0000
Y: 0.0000
Moments of inertia: X: 0.0157
Y: 0.0388
Product of inertia: XY: -0.0143
Radii of gyration: X: 0.2514
Y: 0.3950
Principal moments and X-Y directions about centroid:
I: 0.0089 along [0.9019 -0.4319]
J: 0.0457 along [0.4319 0.9019]

OPG-3078

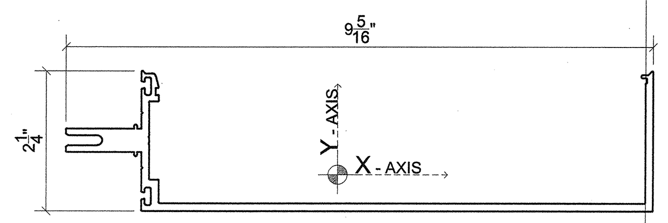

Area: 1.9387
Perimeter: 30.0443
Bounding box: X: -4.3004 -- 4.9856
Y: -0.5804 -- 1.6486
Centroid: X: 0.0000
Y: 0.0000
Moments of inertia: X: 0.7885
Y: 20.2577
Product of inertia: XY: -0.9858
Radii of gyration: X: 0.6378
Y: 3.2325
Principal moments and X-Y directions about centroid:
I: 0.7388 along [0.9987 -0.0504]
J: 20.3075 along [0.0504 0.9987]

OPG-3001

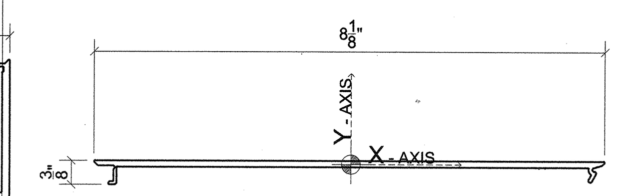

Area: 0.8316
Perimeter: 17.5047
Bounding box: X: -4.0640 -- 4.0346
Y: -0.3247 -- 0.0573
Centroid: X: 0.0000
Y: 0.0000
Moments of inertia: X: 0.0021
Y: 4.7193
Product of inertia: XY: 0.0032
Radii of gyration: X: 0.0498
Y: 2.3823
Principal moments and X-Y directions about centroid:
I: 0.0021 along [1.0000 0.0007]
J: 4.7193 along [-0.0007 1.0000]

OPG-3011

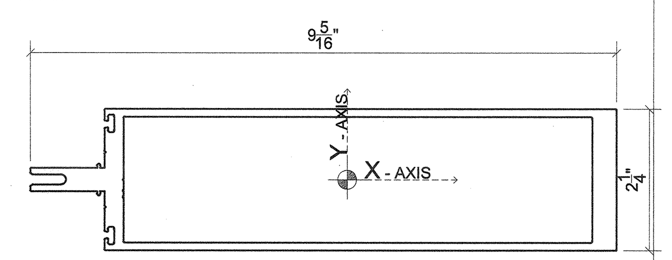

Area: 3.7084
Perimeter: 44.5188
Bounding box: X: -5.0648 -- 4.2782
Y: -1.1250 -- 1.1250
Centroid: X: 0.0000
Y: 0.0000
Moments of inertia: X: 2.7160
Y: 38.6950
Product of inertia: XY: 0.0005
Radii of gyration: X: 0.8558
Y: 3.2303
Principal moments and X-Y directions about centroid:
I: 2.7160 along [1.0000 0.0000]
J: 38.6950 along [0.0000 1.0000]

OPG-1941

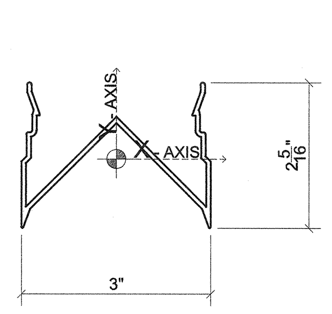

Area: 0.6286
Perimeter: 17.7732
Bounding box: X: -1.5000 -- 1.5000
Y: -1.0969 -- 1.2165
Centroid: X: 0.0000
Y: 0.0000
Moments of inertia: X: 0.2008
Y: 0.8672
Product of inertia: XY: 0.0000
Radii of gyration: X: 0.5652
Y: 1.1746
Principal moments and X-Y directions about centroid:
I: 0.2008 along [1.0000 0.0000]
J: 0.8672 along [0.0000 1.0000]

OPG-1945

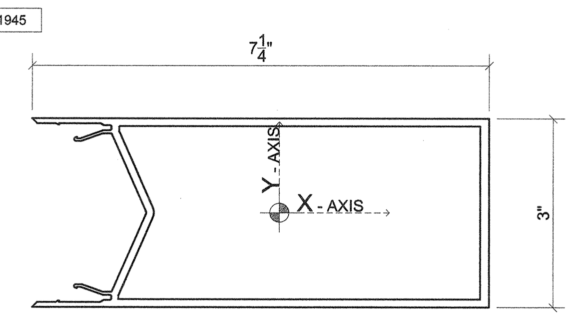

Area: 2.5130
Perimeter: 42.7611
Bounding box: X: -3.9316 -- 3.3162
Y: -1.5005 -- 1.4995
Centroid: X: 0.0000
Y: 0.0000
Moments of inertia: X: 4.0913
Y: 13.4311
Product of inertia: XY: -0.0033
Radii of gyration: X: 1.2760
Y: 2.3119
Principal moments and X-Y directions about centroid:
I: 4.0913 along [1.0000 -0.0004]
J: 13.4311 along [0.0004 1.0000]

DS-45

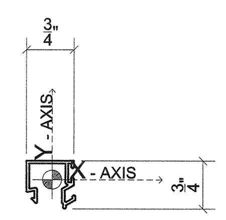

Area: 0.1238
Perimeter: 5.4729
Bounding box: X: -0.4063 -- 0.3666
Y: -0.4630 -- 0.3030
Centroid: X: 0.0000
Y: 0.0000
Moments of inertia: X: 0.0070
Y: 0.0093
Product of inertia: XY: -0.0009
Radii of gyration: X: 0.2369
Y: 0.2737
Principal moments and X-Y directions about centroid:
I: 0.0066 along [0.9421 -0.3354]
J: 0.0096 along [0.3354 0.9421]

M-459

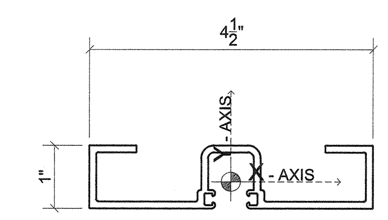

Area: 1.0406
Perimeter: 19.7642
Bounding box: X: -2.2500 -- 2.2500
Y: -0.4229 -- 0.5771
Centroid: X: 0.0000
Y: 0.0000
Moments of inertia: X: 0.1473
Y: 2.2891
Product of inertia: XY: 0.0000
Radii of gyration: X: 0.3762
Y: 1.4832
Principal moments and X-Y directions about centroid:
I: 0.1473 along [1.0000 0.0000]
J: 2.2891 along [0.0000 1.0000]

OPG-1913

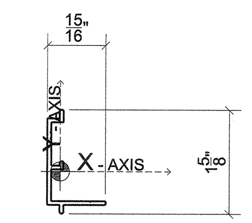

Area: 0.1828
Perimeter: 5.9239
Bounding box: X: -0.2042 -- 0.7258
Y: -0.6697 -- 0.9813
Centroid: X: 0.0000
Y: 0.0000
Moments of inertia: X: 0.0466
Y: 0.0104
Product of inertia: XY: -0.0104
Radii of gyration: X: 0.5049
Y: 0.2390
Principal moments and X-Y directions about centroid:
I: 0.0077 along [0.2575 -0.9663]
J: 0.0494 along [0.9663 0.2575]

OPG-3811

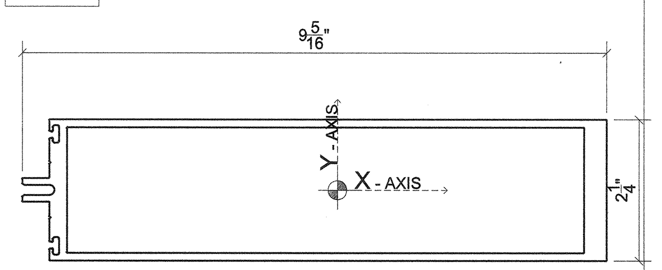

Area: 3.5115
Perimeter: 45.6691
Bounding box: X: -5.0372 -- 4.2738
Y: -1.1250 -- 1.1250
Centroid: X: 0.0000
Y: 0.0000
Moments of inertia: X: 2.8824
Y: 38.3728
Product of inertia: XY: -0.0001
Radii of gyration: X: 0.9060
Y: 3.3057
Principal moments and X-Y directions about centroid:
I: 2.8824 along [1.0000 0.0000]
J: 38.3728 along [0.0000 1.0000]

OPG-314

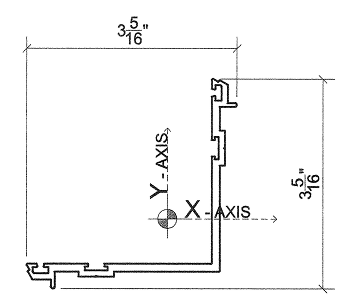

Area: 0.8229
Perimeter: 15.4188
Bounding box: X: -2.2257 -- 1.1075
Y: -1.1075 -- 2.2257
Centroid: X: 0.0000
Y: 0.0000
Moments of inertia: X: 0.8493
Y: 0.8493
Product of inertia: XY: 0.5524
Radii of gyration: X: 1.0159
Y: 1.0159
Principal moments and X-Y directions about centroid:
I: 0.2969 along [0.7071 0.7071]
J: 1.4017 along [-0.7071 0.7071]

OPG-315

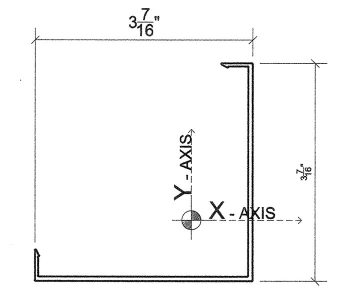

Area: 0.5218
Perimeter: 15.5135
Bounding box: X: -2.4946 -- 0.9694
Y: -0.9694 -- 2.4946
Centroid: X: 0.0000
Y: 0.0000
Moments of inertia: X: 0.7285
Y: 0.7285
Product of inertia: XY: 0.4212
Radii of gyration: X: 1.1816
Y: 1.1816
Principal moments and X-Y directions about centroid:
I: 0.3074 along [0.7071 0.7071]
J: 1.1497 along [-0.7071 0.7071]

OPG-313

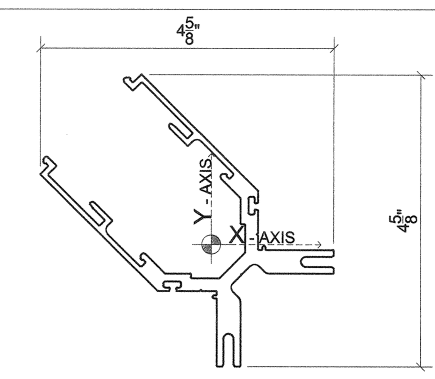

Area: 2.0269
Perimeter: 28.4709
Bounding box: X: -2.6992 -- 1.9410
Y: -1.9411 -- 2.6991
Centroid: X: 0.0000
Y: 0.0000
Moments of inertia: X: 2.0694
Y: 2.0694
Product of inertia: XY: -0.6886
Radii of gyration: X: 1.0104
Y: 1.0104
Principal moments and X-Y directions about centroid:
I: 1.3808 along [0.7071 -0.7071]
J: 2.7580 along [0.7071 0.7071]

OPG-1551

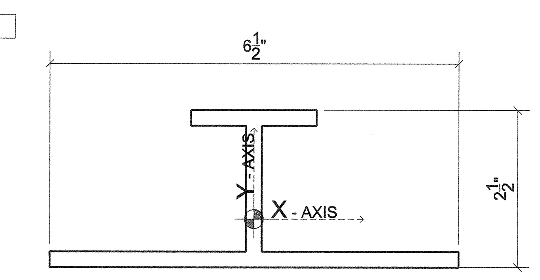

Area: 2.6249
Perimeter: 21.4485
Bounding box: X: -3.2500 -- 3.2500
Y: -0.7679 -- 1.7321
Centroid: X: 0.0000
Y: 0.0000
Moments of inertia: X: 2.2568
Y: 5.8896
Product of inertia: XY: 0.0000
Radii of gyration: X: 0.9272
Y: 1.4979
Principal moments and X-Y directions about centroid:
I: 2.2568 along [1.0000 0.0000]
J: 5.8896 along [0.0000 1.0000]

OPG-1552

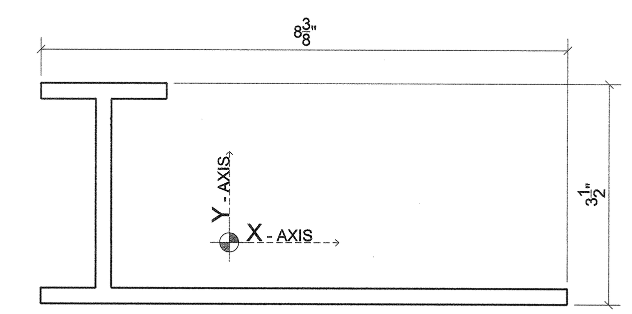

Area: 3.3433
Perimeter: 27.2213
Bounding box: X: -2.9961 -- 5.3789
Y: -0.9752 -- 2.5248
Centroid: X: 0.0000
Y: 0.0000
Moments of inertia: X: 5.4178
Y: 20.3583
Product of inertia: XY: 5.6744
Radii of gyration: X: 1.2730
Y: 2.4676
Principal moments and X-Y directions about centroid:
I: 3.5070 along [0.9477 -0.3191]
J: 22.2690 along [0.3191 0.9477]

OPG-1910

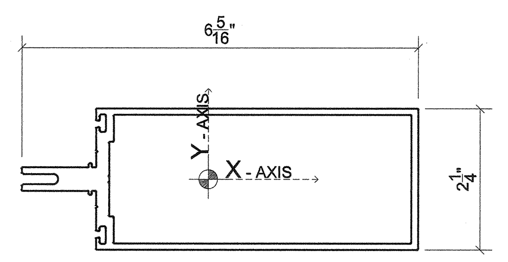

Area: 2.0288
Perimeter: 33.1967
Bounding box: X: -2.9797 -- 3.3313
Y: -1.1251 -- 1.1249
Centroid: X: 0.0000
Y: 0.0000
Moments of inertia: X: 1.4067
Y: 8.3837
Product of inertia: XY: -0.0004
Radii of gyration: X: 0.8327
Y: 2.0328
Principal moments and X-Y directions about centroid:
I: 1.4067 along [1.0000 -0.0001]
J: 8.3837 along [0.0001 1.0000]

OPG-1978

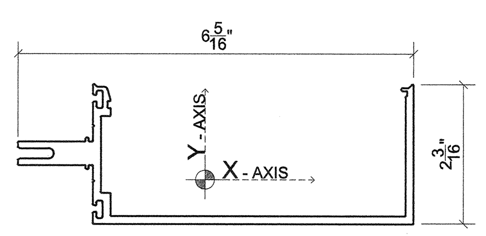

Area: 1.5691
Perimeter: 23.9728
Bounding box: X: -2.9621 -- 3.3259
Y: -0.7076 -- 1.5214
Centroid: X: 0.0000
Y: 0.0000
Moments of inertia: X: 0.6680
Y: 7.3199
Product of inertia: XY: -0.5128
Radii of gyration: X: 0.6525
Y: 2.1598
Principal moments and X-Y directions about centroid:
I: 0.6287 along [0.9971 -0.0764]
J: 7.3592 along [0.0764 0.9971]

OPG-1901

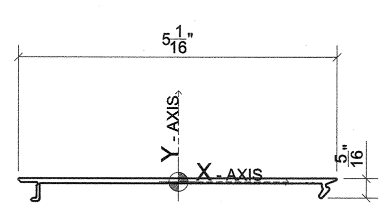

Area: 0.4303
Perimeter: 11.4205
Bounding box: X: -2.5541 -- 2.5039
Y: -0.3075 -- 0.0545
Centroid: X: 0.0000
Y: 0.0000
Moments of inertia: X: 0.0015
Y: 0.9890
Product of inertia: XY: 0.0011
Radii of gyration: X: 0.0592
Y: 1.5160
Principal moments and X-Y directions about centroid:
I: 0.0015 along [1.0000 0.0012]
J: 0.9890 along [-0.0012 1.0000]

OPG-1900

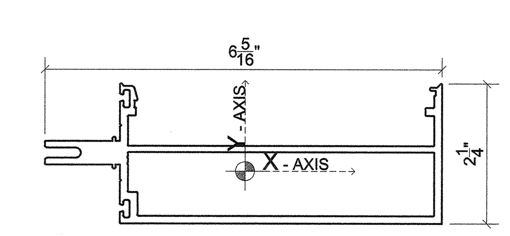

Area: 2.0426
Perimeter: 33.7381
Bounding box: X: -3.1648 -- 3.1212
Y: -0.8344 -- 1.3946
Centroid: X: 0.0000
Y: 0.0000
Moments of inertia: X: 0.7531
Y: 8.5672
Product of inertia: XY: -0.3104
Radii of gyration: X: 0.6072
Y: 2.0480
Principal moments and X-Y directions about centroid:
I: 0.7408 along [0.9992 -0.0396]
J: 8.5795 along [0.0396 0.9992]

OPG-5002

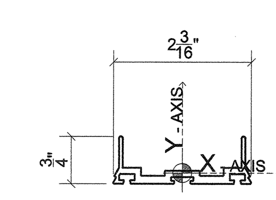

Area: 0.3786
Perimeter: 8.6042
Bounding box: X: -1.0990 -- 1.0990
Y: -0.1709 -- 0.5791
Centroid: X: 0.0000
Y: 0.0000
Moments of inertia: X: 0.0102
Y: 0.1871
Product of inertia: XY: 0.0000
Radii of gyration: X: 0.1645
Y: 0.7030
Principal moments and X-Y directions about centroid:
I: 0.0102 along [1.0000 0.0000]
J: 0.1871 along [0.0000 1.0000]

OPG-5072

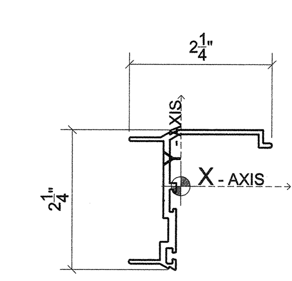

Area: 0.4697
Perimeter: 11.5019
Bounding box: X: -0.8216 -- 1.4414
Y: -1.3294 -- 0.8946
Centroid: X: 0.0000
Y: 0.0000
Moments of inertia: X: 0.2845
Y: 0.1249
Product of inertia: XY: 0.0950
Radii of gyration: X: 0.7782
Y: 0.5156
Principal moments and X-Y directions about centroid:
I: 0.0806 along [0.4223 0.9065]
J: 0.3287 along [-0.9065 0.4223]

DSO-901H

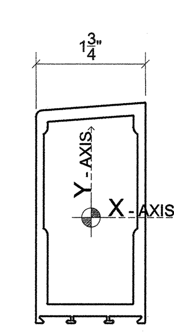

Area: 1.6048
Perimeter: 20.1716
Bounding box: X: -0.8868 -- 0.8632
Y: -1.6738 -- 1.8262
Centroid: X: 0.0000
Y: 0.0000
Moments of inertia: X: 2.4301
Y: 0.7596
Product of inertia: XY: 0.0365
Radii of gyration: X: 1.2306
Y: 0.6880
Principal moments and X-Y directions about centroid:
I: 0.7588 along [0.0218 0.9998]
J: 2.4309 along [-0.9998 0.0218]

DS-001

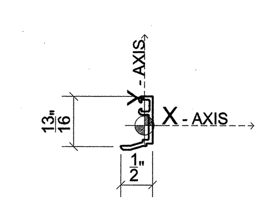

Area: 0.0923
Perimeter: 3.2699
Bounding box: X: -0.3766 -- 0.1284
Y: -0.3842 -- 0.4639
Centroid: X: 0.0000
Y: 0.0000
Moments of inertia: X: 0.0074
Y: 0.0015
Product of inertia: XY: 0.0017
Radii of gyration: X: 0.2838
Y: 0.1285
Principal moments and X-Y directions about centroid:
I: 0.0011 along [0.2525 0.9676]
J: 0.0079 along [-0.9676 0.2525]

DRB-950

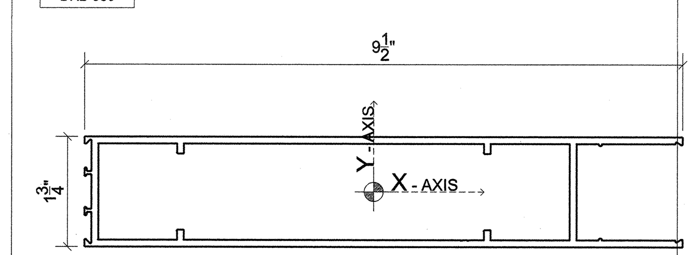

Area: 2.4868
Perimeter: 46.3359
Bounding box: X: -4.6014 -- 4.8986
Y: -0.8751 -- 0.8749
Centroid: X: 0.0000
Y: 0.0000
Moments of inertia: X: 1.4932
Y: 21.2535
Product of inertia: XY: 0.0004
Radii of gyration: X: 0.7749
Y: 2.9234
Principal moments and X-Y directions about centroid:
I: 1.4932 along [1.0000 0.0000]
J: 21.2535 along [0.0000 1.0000]

31330-HVY

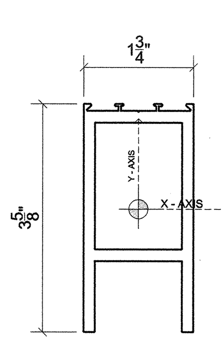

Area: 1.8176
Perimeter: 20.8868
Bounding box: X: -0.8700 -- 0.8700
Y: -1.9517 -- 1.6733
Centroid: X: 0.0000
Y: 0.0000
Moments of inertia: X: 2.1400
Y: 0.8697
Product of inertia: XY: 0.0000
Radii of gyration: X: 1.0851
Y: 0.6917
Principal moments and X-Y directions about centroid:
I: 0.8697 along [0.0000 -1.0000]
J: 2.1400 along [1.0000 0.0000]

31302-HVY

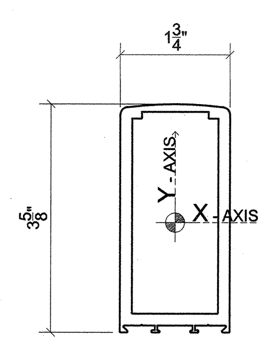

Area: 1.7765
Perimeter: 20.8403
Bounding box: X: -0.8750 -- 0.8750
Y: -1.7423 -- 1.8827
Centroid: X: 0.0000
Y: 0.0000
Moments of inertia: X: 2.6115
Y: 0.8841
Product of inertia: XY: 0.0000
Radii of gyration: X: 1.2125
Y: 0.7054
Principal moments and X-Y directions about centroid:
I: 0.8841 along [0.0000 -1.0000]
J: 2.6115 along [1.0000 0.0000]

31300-HVY

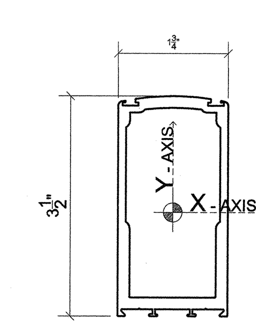

Area: 1.5730
Perimeter: 20.8969
Bounding box: X: -0.8750 -- 0.8750
Y: -1.6491 -- 1.8509
Centroid: X: 0.0000
Y: 0.0000
Moments of inertia: X: 2.3673
Y: 0.7430
Product of inertia: XY: 0.0000
Radii of gyration: X: 1.2268
Y: 0.6873
Principal moments and X-Y directions about centroid:
I: 0.7430 along [0.0000 1.0000]
J: 2.3673 along [-1.0000 0.0000]

HPI architecture
www.hpiarchitecture.com
115 22nd street
Newport Beach, CA 92663
o: 949. 675. 6442

CONSULTANTS

arcadia ®

REGISTERED PROFESSIONAL ENGINEER
SEAN JOSEPH DELP
NO. S5733
EXP. 12-31-19
STRUCTURAL
STATE OF CALIFORNIA
AUG 30 2018

SEALS / APPROVALS

LICENSED ARCHITECT
LAWRENCE ... FRAPPIER
NO. C 11360
Ren. 6-30-19
STATE OF CALIFORNIA

IDENTIFICATION STAMP
DIV. OF THE STATE ARCHITECT
FILE: 30-C2
A# 04-116810
AC – FLS – SS TY
DATE AUG 31 2018

PROJECT TITLE

JOHNSON STUDENT CENTER
INCREMENT 2
1530 W 17TH ST SANTA ANA CA 92706

RANCHO SANTIAGO
Community College District

SUBMITTALS		
#	DATE	DESCRIPTION
	08/13/2018	DSA FINAL SUBMITTAL

PROJECT IDENTIFICATION Project Number
THESE DRAWINGS ORIGINALLY CREATED IN AUTODESK REVIT V. 2016 U.O.N.
THE ORIGINAL SIZE OF THIS SHEET IS 30" X 42".

DRAWN BY RM

CHECKED BY -

THESE DRAWINGS AND SPECIFICATIONS ARE THE PROPERTY AND COPYRIGHT OF THE ARCHITECT AND SHALL NOT BE USED ON ANY OTHER PROJECT OR LOCATIONS EXCEPT AS DESCRIBED ON THE DRAWINGS, WITHOUT WRITTEN AGREEMENT WITH THE ARCHITECT.
© HILL PARTNERSHIP INC. 2017

SHEET TITLE

SECTION PROPERTIES

SHEET NUMBER

CW9.01

DSA FINAL SUBMITTAL

RBH-1021

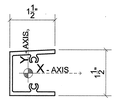

Area: 0.5660
Perimeter: 10.5019
Bounding box: X: -0.6258 -- 0.8742
Y: -0.7302 -- 0.7714
Centroid: X: 0.0000
Y: 0.0000
Moments of inertia: X: 0.2027
Y: 0.1158
Product of inertia: XY: 0.0027
Radii of gyration: X: 0.5984
Y: 0.4524
Principal moments and X-Y directions about centroid:
I: 0.1158 along [0.0314 0.9995]
J: 0.2027 along [-0.9995 0.0314]

RBH-1022

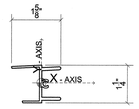

Area: 0.3418
Perimeter: 8.7728
Bounding box: X: -0.9839 -- 0.6367
Y: -0.6541 -- 0.5803
Centroid: X: 0.0000
Y: 0.0000
Moments of Inertia: X: 0.0709
Y: 0.0405
Product of inertia: XY: -0.0087
Radii of gyration: X: 0.4555
Y: 0.3441
Principal moments and X-Y directions about centroid:
I: 0.0382 along [0.2559 -0.9667]
J: 0.0732 along [0.9667 0.2559]

RBH-1023

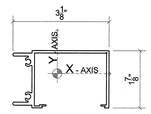

Area: 0.7260
Perimeter: 17.0493
Bounding box: X: -1.4462 -- 1.6788
Y: -1.1247 -- 0.7503
Centroid: X: 0.0000
Y: 0.0000
Moments of Inertia: X: 0.3493
Y: 0.8746
Product of inertia: XY: 0.0683
Radii of gyration: X: 0.6937
Y: 1.0976
Principal moments and X-Y directions about centroid:
I: 0.3406 along [0.9919 0.1268]
J: 0.8834 along [-0.1268 0.9919]

HYATT-09

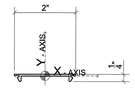

Area: 0.1462
Perimeter: 4.9431
Bounding box: X: -1.0065 -- 1.0065
Y: -0.1856 -- 0.0526
Centroid: X: 0.0000
Y: 0.0000
Moments of inertia: X: 0.0004
Y: 0.0577
Product of inertia: XY: 0.0000
Radii of gyration: X: 0.0527
Y: 0.6282
Principal moments and X-Y directions about centroid:
I: 0.0004 along [1.0000 0.0000]
J: 0.0577 along [0.0000 1.0000]

SSCT-500

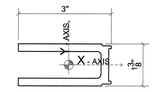

Area: 1.6797
Perimeter: 14.1438
Bounding box: X: -1.6411 -- 1.3789
Y: -0.6875 -- 0.6875
Centroid: X: 0.0000
Y: 0.0000
Moments of inertia: X: 0.4803
Y: 1.3966
Product of inertia: XY: 0.0000
Radii of gyration: X: 0.5347
Y: 0.9118
Principal moments and X-Y directions about centroid:
I: 0.4803 along [1.0000 0.0000]
J: 1.3966 along [0.0000 1.0000]

OPGPRO-9

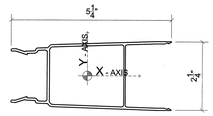

Area: 1.0271
Perimeter: 28.6376
Bounding box: X: -2.4874 -- 2.7435
Y: -1.1250 -- 1.1250
Centroid: X: 0.0000
Y: 0.0000
Moments of Inertia: X: 0.8401
Y: 2.1438
Product of inertia: XY: 0.0000
Radii of gyration: X: 0.9044
Y: 1.4447
Principal moments and X-Y directions about centroid:
I: 0.8401 along [1.0000 0.0000]
J: 2.1438 along [0.0000 1.0000]

OPGPRO-10

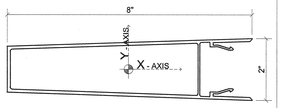

Area: 1.9051
Perimeter: 41.3220
Bounding box: X: -3.9611 -- 4.0629
Y: -1.0108 -- 1.0109
Centroid: X: 0.0000
Y: 0.0000
Moments of inertia: X: 1.1919
Y: 11.7688
Product of inertia: XY: 0.0000
Radii of gyration: X: 0.7910
Y: 2.4855
Principal moments and X-Y directions about centroid:
I: 1.1919 along [1.0000 0.0000]
J: 11.7688 along [0.0000 1.0000]

OPG-600225

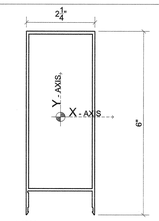

Area: 1.3104
Perimeter: 32.3095
Bounding box: X: -1.1264 -- 1.1236
Y: -3.2022 -- 2.7978
Centroid: X: 0.0000
Y: 0.0000
Moments of inertia: X: 5.2280
Y: 1.2485
Product of inertia: XY: -0.0046
Radii of gyration: X: 1.9974
Y: 0.9753
Principal moments and X-Y directions about centroid:
I: 1.2465 along [0.0011 -1.0000]
J: 5.2280 along [1.0000 0.0011]

UCH-13613

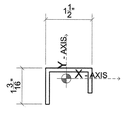

Area: 0.4060
Perimeter: 6.7222
Bounding box: X: -0.6706 -- 0.8294
Y: -0.8448 -- 0.3422
Centroid: X: 0.0000
Y: 0.0000
Moments of inertia: X: 0.0452
Y: 0.1362
Product of inertia: XY: 0.0212
Radii of gyration: X: 0.3335
Y: 0.5791
Principal moments and X-Y directions about centroid:
I: 0.0405 along [0.9764 0.2159]
J: 0.1409 along [-0.2159 0.9764]

TH-607

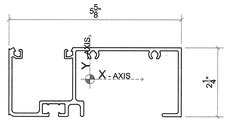

Area: 1.6109
Perimeter: 32.3270
Bounding box: X: -2.6494 -- 2.9800
Y: -1.2168 -- 1.0333
Centroid: X: 0.0000
Y: 0.0000
Moments of inertia: X: 1.1640
Y: 5.9234
Product of inertia: XY: 0.6830
Radii of gyration: X: 0.8501
Y: 1.9176
Principal moments and X-Y directions about centroid:
I: 1.0680 along [0.9903 0.1393]
J: 6.0195 along [-0.1393 0.9903]

TH-410

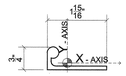

Area: 0.3956
Perimeter: 5.5741
Bounding box: X: -0.6509 -- 1.2831
Y: -0.2247 -- 0.5253
Centroid: X: 0.0000
Y: 0.0000
Moments of inertia: X: 0.0207
Y: 0.1390
Product of inertia: XY: -0.0309
Radii of gyration: X: 0.2290
Y: 0.5927
Principal moments and X-Y directions about centroid:
I: 0.0132 along [0.9712 -0.2383]
J: 0.1466 along [0.2383 0.9712]

TH-640

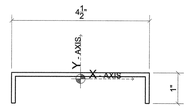

Area: 0.7812
Perimeter: 12.7328
Bounding box: X: -2.2500 -- 2.2500
Y: -0.7976 -- 0.2024
Centroid: X: 0.0000
Y: 0.0000
Moments of inertia: X: 0.0540
Y: 1.9958
Product of inertia: XY: 0.0000
Radii of gyration: X: 0.2629
Y: 1.5984
Principal moments and X-Y directions about centroid:
I: 0.0540 along [1.0000 0.0000]
J: 1.9958 along [0.0000 1.0000]

TH-646

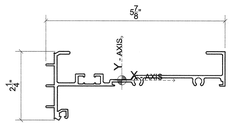

Area: 1.1174
Perimeter: 26.6662
Bounding box: X: -2.5053 -- 3.3883
Y: -1.3050 -- 0.9380
Centroid: X: 0.0000
Y: 0.0000
Moments of inertia: X: 0.2665
Y: 4.8128
Product of inertia: XY: 0.4685
Radii of gyration: X: 0.4883
Y: 2.0754
Principal moments and X-Y directions about centroid:
I: 0.2187 along [0.9948 0.1015]
J: 4.8805 along [-0.1015 0.9948]

TH-653

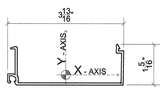

Area: 0.4774
Perimeter: 13.8006
Bounding box: X: -1.9112 -- 1.8995
Y: -0.3348 -- 0.9979
Centroid: X: 0.0000
Y: 0.0000
Moments of inertia: X: 0.0794
Y: 0.9615
Product of inertia: XY: 0.0196
Radii of gyration: X: 0.4079
Y: 1.4192
Principal moments and X-Y directions about centroid:
I: 0.0790 along [0.9998 0.0222]
J: 0.9619 along [-0.0222 0.9998]

TH-606

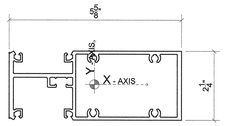

Area: 2.1638
Perimeter: 40.5387
Bounding box: X: -2.7933 -- 2.8357
Y: -1.1634 -- 1.0869
Centroid: X: 0.0000
Y: 0.0000
Moments of inertia: X: 1.4267
Y: 7.9160
Product of inertia: XY: -0.1388
Radii of gyration: X: 0.8120
Y: 1.9127
Principal moments and X-Y directions about centroid:
I: 1.4237 along [0.9998 -0.0214]
J: 7.9189 along [0.0214 0.9998]

HPI architecture
www.hpiarchitecture.com
115 22nd street
Newport Beach, CA 92663
o: 949. 675. 6442

CONSULTANTS

arcadia

REGISTERED PROFESSIONAL ENGINEER SAM JOSEPH KEEP NO. 53733 EXP. 12-31-19 STRUCTURAL STATE OF CALIFORNIA

AUG 30 2018

SEALS / APPROVALS

REGISTERED PROFESSIONAL ENGINEER CHRISTOPHER A. JOHNSON NO. 17505 CIVIL STATE OF CALIFORNIA 8-30-18

IDENTIFICATION STAMP
DIV. OF THE STATE ARCHITECT
FILE: 30-C2
A# 04-116810
AC — FLS — SS TY
DATE AUG 31 2018

PROJECT TITLE

JOHNSON STUDENT CENTER
INCREMENT 2
1530 W 17TH ST SANTA ANA CA 92706

RANCHO SANTIAGO
Community College District

SUBMITTALS

#	DATE	DESCRIPTION
	08/13/2018	DSA FINAL SUBMITTAL

PROJECT IDENTIFICATION Project Number

THESE DRAWINGS ORIGINALLY CREATED IN AUTODESK REVIT V. 2016 U.O.N.

THE ORIGINAL SIZE OF THIS SHEET IS 30" X 42".

DRAWN BY RM

CHECKED BY -

THESE DRAWINGS AND SPECIFICATIONS ARE THE PROPERTY AND COPYRIGHT OF THE ARCHITECT AND SHALL NOT BE USED ON ANY OTHER PROJECT OR LOCATIONS EXCEPT AS DESCRIBED ON THE DRAWINGS, WITHOUT WRITTEN AGREEMENT WITH THE ARCHITECT.

© HILL PARTNERSHIP INC. 2017

SHEET TITLE

SECTION PROPERTIES

SHEET NUMBER

CW9.02

DSA FINAL SUBMITTAL